North American Journal of Aquaculture 72:195–200, 2010
American Fisheries Society 2010
DOI: 10.1577/A09-061.1

[Technical Note]

Evaluation of an Ultra-Low-Flow Water Delivery System for Small Experimental Tanks

ANDREW MITCHELL* AND BRADLEY FARMER

U.S. Department of Agriculture, Agricultural Research Service, Harry K. Dupree Stuttgart National Aquaculture Research Center, Post Office Box 1050, Stuttgart, Arkansas 72160, USA

Abstract.—An ultra-low-flow water delivery system was developed and tested for use in research studies requiring low flow in small water volumes. Small test systems save on the amount of fish, chemicals, and biologics needed in disease challenge and treatment experiments. The ultra-low-flow system, consisting of a semi-enclosed header tank with a variable-height standpipe and dulled, guarded syringe needle nozzles, can produce flows that result in 1–20 water exchanges/d for a 10-L volume. Water was prefiltered through two inline, 70-μm filters to limit flow loss due to particulates blocking the small-orifice nozzles. Accurate and precise flows are produced by the system, and needle nozzles should last at least 7 d before fouling requires them to be changed; nozzle changes can be made in about 5 s. Flows in the range of 5–135 mL/min were produced by using 3.8-cm-long needles (16, 18, 20, and 21 gauge) with standpipe heights of 15.2, 30.5, and 45.7 cm. Water flows through selected needle nozzles and standpipe heights varied by no more than 5% over a 7-d period. This ultra-low-flow system provides a practical, inexpensive, and precise water delivery system that should have multiple uses for fisheries research.

As part of a research project to develop a practical method of waterborne bacterial challenge, it became a priority to build a reliable low-flow water system that provided about two to four water exchanges per day in small tanks of less than 30 L in size. Low water flow—directly, indirectly, or in combination with other factors—predisposes fish to bacterial disease problems (Reddacliff et al. 1996; Raynard et al. 2007). Lowering flow rates increases the bacterial contact time with fish before bacteria are flushed out of the water column. It also allows more time for bacteria to establish in the biofilm on tank walls, standpipes, heaters, and air lines, which could potentially produce a continued source of infection (Welker et al. 2005). Additionally, low flow can enhance the bacterial challenge method by allowing the buildup of nitrogenous waste products in the water that in turn predispose fish to infection (Noga 1996).

Two other concerns, high fish-stocking density and the application of a concentrated bacterial inoculum, produced a need for the use of a low-flow system in small aquaria or tanks. A high fish stocking density facilitates the spread of bacteria from fish to fish, and a large volume of a concentrated bacterial inoculum is required to establish waterborne bacterial infections of nonobligate bacterial pathogens (e.g., *Flavobacterium columnare*, the agent of columnaris disease) in fish (Darwish et al. 2008). In 1 L of water, about sixteen 3-g fish or seven 7-g fish are needed to achieve the same fish density (50 g of fish/L of water) that is used in columnaris challenge tests at the Harry K. Dupree Stuttgart National Aquaculture Research Center, Stuttgart, Arkansas. Small aquaria or tanks (<20 L) limit the number of fish and the volume of bacterial inoculum needed for each experimental unit. To get only two to four water exchanges per day in small tanks, an ultra-low-flow system is needed.

Maintaining continuous and precise water flows to a series of fish tanks or aquaria requires that water pressure be held constant to all delivery nozzles and that these nozzles are uniformly made to deliver a precise quantity of water. When continuous low flows are required, the importance of having uniform and continuous water pressure and precision nozzles is magnified. Fluctuations in water pressure occur daily at most facilities for a number of reasons, including (1) varying and unpredictable water usage by other researchers, (2) automatic backwashing of filters, (3) a buildup of particulates and scale in water lines and nozzles, and (4) electrical power surges or water pump failures. Water-pressure-reducing valves can protect against rising pressure, but when pressure drops lower than the valves' preset pressure the flows will also drop. Even if the pressure going into a line could be held constant, the nozzles closest to the inflow will tend to deliver more water because wall friction will lower the flow to nozzles farther down the line. Looping the inflow so that it is delivered at both ends of a pipe will help, but this strategy still leaves the middle nozzles with less flow. Nozzles generally lack precision, but many are adjustable and can deliver approximate water quantities. With necked-down nozzles on standard 1.9-cm (0.75-in) sink faucets, relatively even flows with about a 10% fluctuation were obtainable down to 500 mL/min (authors'

* Corresponding author: drew.mitchell@ars.usda.gov

Received September 8, 2009; accepted December 9, 2009
Published online March 25, 2010

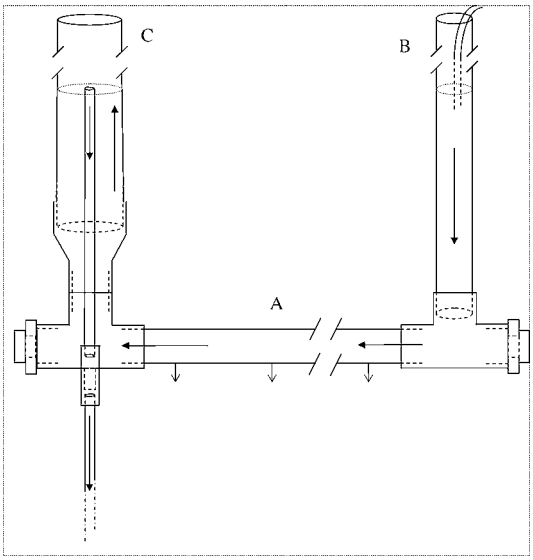

FIGURE 1.—Ultra-low-flow system made up of an enclosed horizontal portion of pipe (A) with open vertical water inflow (B) and standpipe ends (C). The horizontal and water inflow portions are made with 5.08-cm-diameter polyvinyl chloride pipe; the standpipe portion is made of a 1.27-cm-diameter standpipe within a 10.16-cm-diameter pipe housing. Arrows with solid tips indicate water flow, and those with open tips indicate water flow from syringe needle nozzles.

personal observations). For a 10-L water volume, a flow rate of 500 mL/min would provide 72 water exchanges/d; two to four daily water exchanges would require a flow rate of about 14–28 mL/min. Even with commercial flow control devices (Model Number FC72HM-1D; Hendrickson Brothers, Corona, California) placed at the faucet outlet, flows could not be lowered below 500 mL/min and water fluctuations caused by particulate matter were sometimes problematic.

Methods to limit fluctuation in flows have been in use for many years. Two examples of these are the header tank and peristaltic pump. Header tanks, long used as a water source for fish culture and fish research applications (Sigholt et al. 1993), allow a consistent and constant head pressure to be maintained over each nozzle in the tank provided that the tank is level and all nozzles are set at the same depth in the tank. A standpipe within the tank maintains a constant head (given water depth = given pressure) and releases the excess water. Excess water flow is set to ensure that the header tank remains full if the pressure of the water supply drops. A limit to the header tank system is the precision of the delivery nozzles. To maintain precision when using nozzles with very small openings, a filter must be used to remove particulates that could restrict water flow.

Peristaltic pumps can be used to supply water to small, flow-through tanks or aquaria. There are numerous reports of other fisheries uses for these pumps, including as a continuous-dosing apparatus for chronic exposure of aquatic organisms to pollutants (Kiemer et al. 1995), applying chemical treatments to water (Darwish et al. 2002), and automatic feeding of planktonic organisms (Papandroulakis et al. 2002; Pfeiffer and Ludwig 2007). The peristaltic pump will deliver a constant and precise amount of water, even small quantities at rates of less than 1 mL/min (Cole Parmer, Vernon Hills, Illinois), as long as a sufficient supply of filtered water is available for the siphon hose (e.g., particulates can block the lines). The cost of peristaltic pumps required to serve a multi-tank system is high when compared with a single header tank that can service the same multi-tank system, and these pumps can malfunction, causing water flow to vary or cease.

The goal of this project was to develop and build an ultra-low-flow system using a header tank capable of delivering water at a flow rate of 30 mL/min or less (about four daily water exchanges for a 10-L volume of water). The system had to be reliable, consistently produce a precise low flow, and be minimal in cost.

Methods

Semi-enclosed header tank.—The semi-enclosed header tank (Figure 1) was composed of three parts: (1) an enclosed, horizontally positioned pipe (schedule-40 polyvinyl chloride [PVC] pipe, 5.08 cm in diameter and 4 m long) that contained the nozzles and two open vertical ends (both 63 cm in height), (2) the water inlet (PVC pipe, 5.08 cm in diameter), and (3) the end (PVC pipe, 10.16 cm in diameter) containing the standpipe. The vertical ends were joined to the horizontal pipe at opposite ends with 5.08-cm PVC tees; the standpipe end required a 10.16- × 5.08-cm reducing coupling to attach to the tee. The open tee ends contained threaded, plugged adapters that served as clean-outs if particulates entered the pipe. The end that housed the standpipe was large enough for an operator's hand to fit inside to remove and replace the standpipe. The tee at the standpipe end was drilled (1.9-cm-diameter hole) in the center, and a 1.27-cm, threaded male adapter was inserted from the inside through the wall; attached to a 1.27-cm, threaded female adapter on the outside wall; and glued in place to prevent leakage. A 1.27-cm-diameter standpipe (up to 60 cm high) was placed in the male adapter inside the tee, and a similar pipe was attached to the outside female adapter and used as a waste line for excess water. Inflow of water was set to

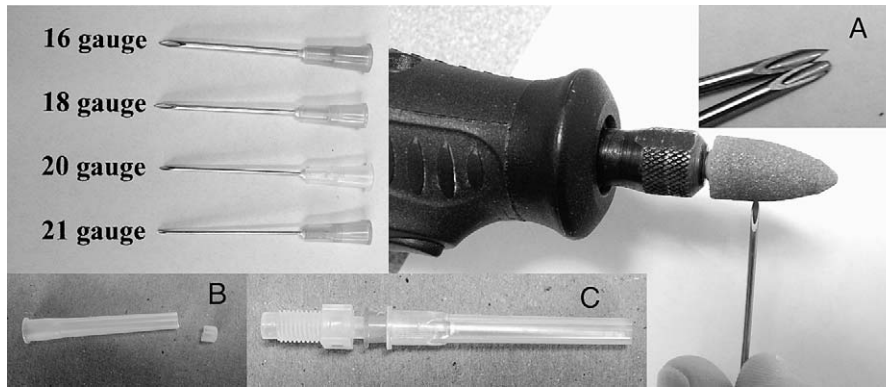

FIGURE 2.—Disposable, 3.8-cm syringe needles of four different gauges were used as test nozzles for the ultra-low-flow system: **(A)** needle tips were dulled with a grinder (dulled tip seen in lower needle); **(B)** needle nozzle was fitted with a guard (about 5 mm of the guard's tip were removed to allow water flow from needle with guard on); and **(C)** the needle was connected to an adapter (Adapter M, 6.4-mm external screw thread, 4-mm-outer-diameter nipple; PerkinElmer) for attachment to the water source.

ensure a continued and excess flow (uninterrupted constant head pressure) through the system standpipe. Standpipes of variable heights were used to give a variety of head pressures that would result in a wide range of flows. The system was hung with wire, and the horizontal pipe was leveled with a spirit or bubble level.

Needle nozzles.—Disposable, 3.8-cm syringe needles (16, 18, 20, and 21 gauge) were used as nozzles. For safety precautions, the needles were dulled with a Dremel 952 grinding stone (Dremel International, Racine, Wisconsin; Figure 2A). Because the dulled needles were still capable of causing a puncture wound, they were covered with standard needle guards that had about 5 mm of the end removed (Figure 2B, C).

To uniformly space the nozzles, the underside of the horizontal pipe was drilled and tapped (6.4-mm screw thread) at 26.5-cm intervals. Needle nozzles were attached to nipples (Adapter M, 6.4-mm external screw thread, 4-mm-outer-diameter nipple; PerkinElmer, Waltham, Massachusetts) that were hand-tightened to the underside of the pipe (Figure 2C). To prevent leakage, two to three wraps of Teflon tape were put both on the thread end and the end receiving the needles. Needles could be taken off and put back on repeatedly without replacement of the tape. The system supplied water to fifteen 19-L (5-gal) aquaria, with 5-cm spacing between aquaria placed below the ultra-low-flow system. The standpipe in each aquarium was set to contain 10 L of water. Two 70-μm filters were placed in line on the incoming water to remove particulates and limit loss of flow through the needles. The low-flow system was chlorinated (approximately 100 mg of available chlorine/L of water; this concentration was held static in the system for approximately 16 h; nipples were plugged) monthly to prevent any bacterial or algal buildup that might break loose and clog the needles. The system was flushed with freshwater for 24 h before replacing needle nozzles. Water attributes that could affect needle-clogging, including total alkalinity and hardness (210–221 and 120–124 mg/L as $CaCO_3$, respectively) and chlorides (94–117 mg/L), were determined by standard titration methods (APHA et al. 2005) and a spectrophotometric method (Hach Method 8113; Hach Co., Loveland, Colorado), respectively.

Testing system for flows.—Ten disposable, 3.8-cm syringe needles of each gauge (16, 18, 20, and 21 gauge; PrecisionGlide needle numbers 305198, 305196, 305176, and 305167, respectively; Becton-Dickinson, Rutherford, New Jersey) were evaluated for flow rate using the ultra-low-flow system set with a standpipe height of 30.5 cm (12 in). The water in the system circulated for 1 h, and then each syringe needle was lightly tapped to dislodge any air bubbles that could impede the water stream before timed measures of flow were taken. The flow from each needle nozzle was measured by collecting the water for 1 min into appropriately sized graduated cylinders (10, 25, 50, or 100 mL). A second flow measure was taken from all 10 nozzles 1 h after the first measure. Range of flows for each nozzle was determined from the 20 measures taken. Three 3.8-cm, 25-gauge needle nozzles (PrecisionGlide needle number 305127) were also tested as described.

Three each of the 16-, 18-, 20-, and 21-gauge nozzles were evaluated as described previously but at standpipe heights of 15.2 cm (6 in), 30.5 cm, and 45.7

TABLE 1.—Evaluation of the precision of needle nozzles used in the ultra-low-flow system. Average (±SD) flow rate (mL/min) in the ultra-low-flow system is given for four nozzle gauge sizes ($n = 10$) under a water head pressure from a 30.5-cm standpipe height. Flow ranges (mL/min) are given for each needle nozzle size. The range in parentheses is that calculated with the highest and lowest reading nozzles removed, demonstrating the potential for the selection of an even narrower range of flows.

Needle size (gauge)	Flow rate (mL/min) mean ± SD	Flow range (mL/min)
21	8.89 ± 012	8.7–9.1 (8.7–9.0)
20	15.46 ± 0.49	14.8–16.4 (15.0–16.0)
18	39.8 ± 0.76	39–42 (39–41)
16	104.0 ± 3.27	96–108 (102–107)

cm (18 in). The range of flows was determined from two measures taken for each nozzle at each standpipe height; six total measures were taken at each gauge and standpipe height.

Additionally, the flow rates for each of ten 20- and 18-gauge needle nozzles were measured daily (7-d test, days 0–7) at 30.5- and 15.2-cm standpipe heights, respectively, to determine the consistency of flow from nozzles over time. Needle nozzles for the 7-d test were preselected from a group of 15 needles for each gauge to limit flow rate variation. Two measures were taken for each nozzle daily, and a third measure was taken if the two measures varied.

A regression equation was developed using Minitab version 13 (Minitab, Inc., State College, Pennsylvania) to approximate the standpipe height needed to produce a given flow from a designated needle gauge. This was done using the average measured flow rates from a given needle gauge (four gauges) at three standpipe heights ($n = 3$). The r^2 value for each of the four equations was determined.

Results and Discussion

The ultra-low-flow system with the needle nozzles provided precise and consistent flows (Table 1). The greatest differences between the average flow and either the high or low flow of the range (whichever height provided the greatest difference; Table 1) for the 21-, 20-, 18-, and 16-gauge needles tested were 2.3, 6.1, 5.5, and 7.7%, respectively. When the needles with the highest and lowest flows were removed for each gauge, the greatest percent difference was 2.3, 3.5, 3.0, and 2.9%, respectively; all differences were less than 5%. Removal and replacement of a few needle nozzles can lower the range of flows for all needle gauges. In our bacterial challenge study experiments, we often cull and replace three or four needles to obtain a set of 15 needle nozzles very near the targeted flow rate. The flow from three 25-gauge needles, with water at a 30.5-cm standpipe height, was measured at approximately 0.8 mL/min. As this flow was determined to be too low for our use, no further effort was made to more accurately measure the flows or to further test this needle gauge at different standpipe heights. Flows from about 5 to 135 mL/min were obtained using the 16- to 21-gauge needles at standpipe heights from 15.2 to 45.7 cm (Figure 3). From the regression equations (Figure 3), the user can derive a close approximation of the standpipe height needed from a given needle gauge and a targeted flow. The best standpipe height approximations are from the 21-, 20- and 18-gauge needles.

Flows rates dropped an average of 0.95 mL/min (range = 0.5–1.5 mL/min) and 0.61 mL/min (range = 0.4–0.9) in 1 week for the 18- and 20-gauge needle nozzles, respectively. The 1-week flows dropped 3.2% and 4.1% for the 18- and 20-gauge needles, respectively. Only one nozzle (an 18-gauge needle with a 1.5-mL/min drop) exhibited a drop in flow rate by more than 1.0 mL/min. The day after the completion of the test, that nozzle was gently blown out and the flow increased by 1.0 mL/min, resulting in an overall drop of 0.5 mL. If all 20 nozzles in the test had been gently tapped or blown out, then declines in flow rate would have been less. Gently tapping or blowing out the nozzles every 5 to 7 d will help maintain maximum flows. If flows are unacceptably low, then the needles can be rapidly replaced (in about 5 s). In our ultra-low-flow system, we use and maintain flows within 5% of the target rate. When we used 30 mL/min as our target rate, we picked nozzles that ranged in flow between 30.0 and 31.0 mL/min and replaced them when flow declined to 29.0 mL/min (3.3% above or below range). The needle nozzles may foul more quickly and require more frequent changes if the water contains a higher total hardness, total alkalinity, or chloride level than that recorded in our tests.

The ultra-low-flow system, consisting of a semi-enclosed header tank with the pressure regulated by standpipe height and with flow delivered by syringe needle nozzles, provided precise and consistent flows. The system should run with only minimal maintenance. On occasion, some nozzles will need to be cleared (lightly tapped or blown out) if particulates impede flow. The nozzles should run 7 d before fouling occurs or before biofilms restrict flows to the point where the nozzles need to be changed; we had several needle nozzles that lasted more than 10 d (our studies usually are terminated within this time period) without needing a change. Using this system in tanks containing 10 L of water, water flows with exchange rates of one or less per day are possible. With a minimal selection of

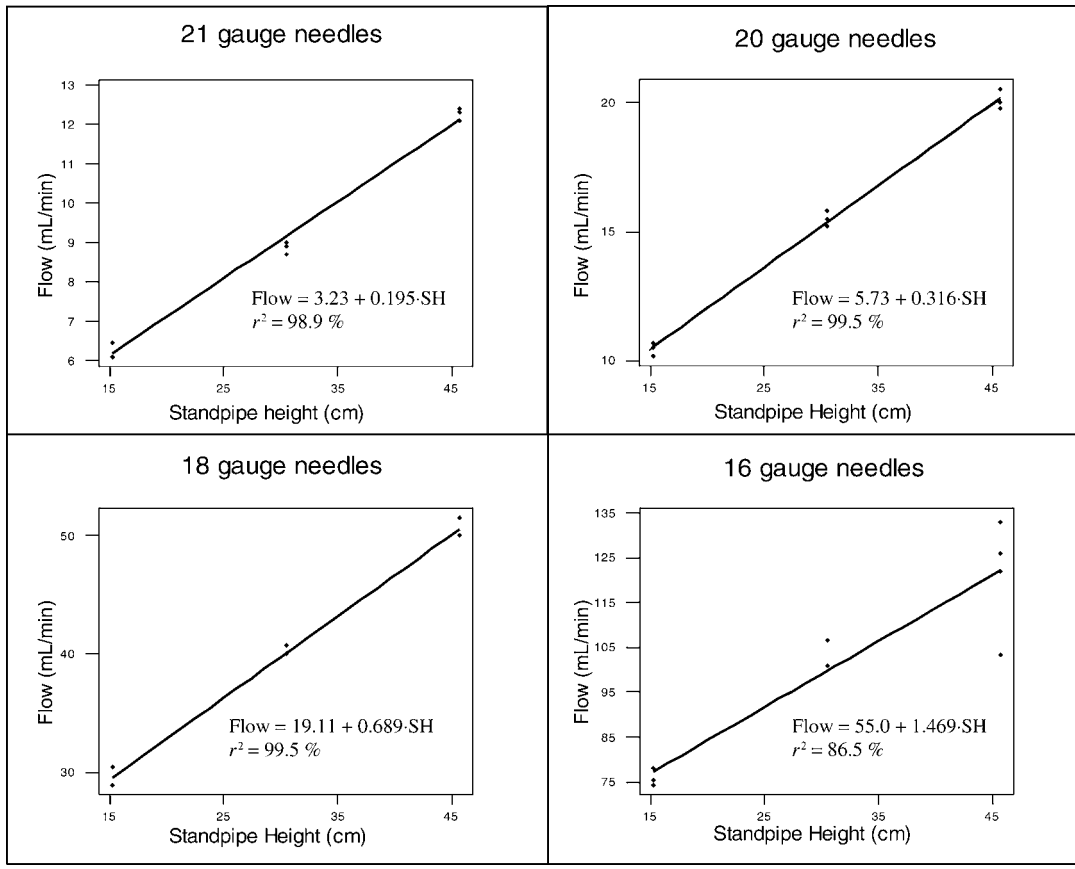

FIGURE 3.—Range of water flow rates (mL/min) that can be achieved with the ultra-low-flow system. Fitted-line regression plot is for flows from four different needle gauges at 15.2-, 30.5-, and 45.7-cm standpipe heights (SH; $n = 3$). Regression equations and their r^2 values are given.

needle nozzles, a very narrow flow range can be attained (Table 1).

In an experiment designed to treat a parasite infestation, a single water exchange every 2 h was needed; for 10 L of water per tank, this required a water flow rate of about 80 mL/min. As can be observed in Figure 3, the closest rate was obtained from 16-gauge needles with a 15.2-cm standpipe. By increasing the length of the standpipe to 19 cm and by culling four needles, we were able to obtain nozzles that delivered water at a rate of 78–81 mL/min for 12 tanks (without the culling, flow range was 76–83 mL/min).

A system designed to give a specific flow rate can be built by copying the design of our low-flow system and by using the regression equation associated with the appropriate needle nozzle size (Figure 3) to select the standpipe height. A small adjustment in standpipe height may be required to get a specific target flow rate; regression equations may help target the most suitable pipe length. We built a second system out of clear plastic and used a 15.2-cm standpipe and 18-gauge needles to target a 30-mL/min flow rate. When water flows were measured, the system gave a rate of 27–28 mL/min, which was close to the projected flow. After replacing the 15.2-cm standpipe with a 19-cm pipe, flow rates were 29.5–30.5 mL/min from 15 needle nozzles; three needles were removed and replaced to get this range of flows. The 1.27-cm, clear, threaded male adapter used to hold the standpipe was a little shorter than that from the original system, which may have been part of the reason for needing a taller standpipe.

The clear plastic system was built to determine whether air pockets developed and whether debris accumulated in the horizontal pipe section. Air pockets did not develop, and no air bubbles that could have potentially caused an airlock or reduced flow were observed around the nozzle openings. When the

prefilters were changed, a sudden increase of particulates entering the system was seen, and these had to be flushed out. To avoid this problem after the filters were changed, water was diverted for a few minutes before being allowed to re-enter the system. The clear PVC system also allowed the height of water in both vertical sections of the system to be measured. With the 15.2-cm standpipe, the inlet side had a measure (from the lowest portion of the tee to the water meniscus) of 20.9 cm, while the standpipe end had a measure of 20.5 cm. A 0.4-cm difference in height over a 4-m run is very small and a good indication of a level system and of little head pressure difference across the system.

The cost of the system supplying low water flow to 15 aquaria was approximately US$270.00. Two-thirds of the cost ($180.00) was for the PerkinElmer adapters for the syringe needles. A less-expensive adapter may possibly be available to further reduce system costs. The costs were about $1,000.00 when using clear PVC. The cost of using the least expensive peristaltic pumps with multi-heads would be well over $1,500 (Fisher Scientific, Pittsburgh, Pennsylvania; Cole Parmer), and 15 separate tube lines would be needed to bring water from a reservoir source through the pump and into the tanks.

The ultra-low-flow system should prove to be a useful research tool for studies requiring low flow in small tanks or aquaria. In addition to the bacterial challenge studies (the reason for the system's development), this system could be used for parasite challenge studies. This system provides an environment between that found in static and typical flow-through tanks and is a practical, inexpensive, and precise water flow system that should have multiple uses for fisheries research.

Acknowledgments

The authors acknowledge Matthew Barnett and Brandon Clemons for their dedicated technical assistance and Philip Pearson for his advice on the use of clear PVC in the construction of one of the test systems. We are grateful to Jerry Ludwig, Nathan Stone, Dave Straus, and Tim Pfeiffer for constructive comments and review of early manuscripts. Mention of product names does not imply endorsement by the U.S. Department of Agriculture's Agricultural Research Service.

References

APHA (American Public Health Association), American Water Works Association, and Water Pollution Control Federation. 2005. Standard methods for the examination of water and wastewater, 21st edition. APHA, Washington, D.C.

Darwish, A. M., B. R. Griffin, D. L. Straus, and A. J. Mitchell. 2002. Histological and hematological evaluation of potassium permanganate exposure in channel catfish. Journal of Aquatic Animal Health 14:134–144.

Darwish, A. M., A. J. Mitchell, and M. S. Hobbs. 2008. In vitro and in vivo evaluation of potassium permanganate treatment efficacy for the control of acute experimental infection by *Flavobacterium columnare* in channel catfish. North American Journal of Aquaculture 70:314–322.

Kiemer, M. C. B., K. D. Black, D. Lussot, A. M. Bullock, and I. Ezzi. 1995. The effects of chronic and acute exposure to hydrogen sulphide on Atlantic salmon (*Salmo salar* L.). Aquaculture 135:311–327.

Noga, E. J. 1996. Fish disease: diagnosis and treatment. C.V. Mosby, St. Louis, Missouri.

Papandroulakis, N., D. Papaioannou, and P. Divanach. 2002. An automated feeding system for intensive hatcheries. Aquacultural Engineering 26:13–26.

Pfeiffer, T. J., and G. M. Ludwig. 2007. Small-scale system for the mass production of rotifers using algal paste. North American Journal of Aquaculture 69:239–243.

Raynard, R., T. Wahli, I. Vatsos, and S. Mortensen, editors. 2007. Review of disease interactions and pathogen exchange between farmed and wild finfish and shellfish in Europe. National Centre for Veterinary Contract Research and Commercial Services (VESO), Project Number 1655, Oslo.

Reddacliff, G. L., M. Hornitzky, and R. J. Whittington. 1996. *Edwardsiella tarda* septicaemia in rainbow trout (*Oncorhynchus mykiss*). Australian Veterinary Journal 70:30.

Sigholt, T., L. Jorgensen, and A. Naess. 1993. Oxygen consumption and ammonia excretion in intensive reared juvenile cod (*Gadus morhua*)—effect of feeding and weight. Pages 431–432 *in* H. Reinholt, L. A. Dahle, L. Jorgensen, and K. Tvinnereim, editors. Fish farming technology. Van Nostrand Reinhold, New York.

Welker, T. L., C. A. Shoemaker, C. R. Arias, and P. H. Klesius. 2005. Transmission and detection of *Flavobacterium columnare* in channel catfish *Ictalurus punctatus*. Diseases of Aquatic Organisms 63:129–138.