CSIRO PUBLISHING
www.publish.csiro.au/journals/app *Australasian Plant Pathology*, 2010, **39**, 247–253

A DNA-based method for detection of *Peridermium harknessii*, the causal agent of western gall rust

Tod D. Ramsfield[A,C] *and Detlev R. Vogler*[B]

[A]Scion*, Forest Protection, Private Bag 3020, Rotorua 3010, New Zealand.
[B]USDA Forest Service, Pacific Southwest Research Station, Institute of Forest Genetics, 2480 Carson Road, Placerville, CA 95667-5107, USA.
[C]Corresponding author. Email: Tod.Ramsfield@scionresearch.com
*Scion is the trading name of the New Zealand Forest Research Institute Ltd.

Abstract. *Peridermium harknessii* is not present in the southern hemisphere yet it poses a serious threat to *Pinus radiata* cultivation in exotic forest plantations there. If a suspected incursion were to occur, it would be necessary to rapidly confirm the presence of *P. harknessii* within non-sporulating galls. With this in mind, we have developed a DNA-based identification system, using the first intergenic spacer region (IGS-1), that is able to detect the presence of the pathogen within galled tissue. The PCR primers are highly specific and with the exception of the closest relative, *Cronartium quercuum* f. sp. *banksianae*, they did not cross react with any of the 11 species within the closely related genera *Cronartium* and *Peridermium* that were tested. Phylogenetic analysis of the IGS-1 region confirmed that *C. quercuum* f. sp. *banksianae* is the closest relative to *P. harknessii*. The PCR primers and protocol reported here should prove useful in the event of a suspected western gall rust disease outbreak in exotic *P. radiata* plantations.

Additional keywords: biosecurity, invasive pathogen.

Introduction

Western gall rust (caused by *Peridermium harknessii* J.P. Moore = *Endocronartium harknessii* [J.P. Moore (Y. Hiratsuka)] is a serious autoecious rust disease of several members of subgenus *Pinus* in North America, including *Pinus radiata* (Parmeter and Newhook 1967). This pathogen is not recorded in the southern hemisphere. Because of extensive plantings of susceptible species in New Zealand, Australia, Chile, and South Africa, it is considered to be a serious threat to exotic forest plantations (Parmeter and Newhook 1967; Old 1981, 1985; Old *et al.* 1986; van der Kamp 1989; Ramsfield and Vogler 2004; Ramsfield *et al.* 2007). *P. harknessii* is closely related to the genus *Cronartium* that causes disease on several different *Pinus* spp. and it is hypothesised that *P. harknessii* is an autoecious derivative of its closest relative, *Cronartium quercuum* f. sp. *banksianae*, or that they share a recent common ancestor (Vogler and Bruns 1998). Aeciospores produced on galls in the spring and early summer directly infect elongating pine shoots, resulting in formation of galls on infected shoots or stems (van der Kamp 1989). Aeciospores are produced within peridia on galls between 1 and 2 years following infection (Old 1981) and sporulation continues yearly until gall death. The time between infection, gall development and sporulation on the galls means that there could be a period of years between disease establishment and detection by morphological characteristics. Main stem infections weaken the stem, leading to breakage at the infection point (Peterson 1960) or formation of 'hip cankers' if the stem is strong enough to withstand breaking (Old 1981). Branch infections serve as important sources of inoculum for spread and intensification of the disease (van der Kamp 1989). In North America, the disease ranges from the Yukon to northern Baja, California and from the Pacific to Atlantic coasts (van der Kamp 1989).

P. harknessii is autoecious (i.e. spores infect directly from pine to pine). Thus, the pathogen could spread relatively quickly in susceptible exotic forest plantations, unlike heteroecious (i.e. host-alternating) *Cronartium* rusts that may be limited by the distribution of alternate hosts. To prevent establishment and spread of a disease, rapid detection and implementation of an incursion response are necessary (Hosking *et al.* 1999; Turner *et al.* 2004). Therefore, a detection method that does not rely upon spore production for species identification would be advantageous, as infected material could be identified and destroyed before sporulation and potential spread of the disease. It is possible to culture *P. harknessii* into axenic culture but growth is slow (Allen *et al.* 1988) and this has only been accomplished from mature galls immediately before aeciospore production (Lundquist *et al.* 1994). DNA-based diagnostic systems have been utilised to detect plant pathogens *in planta*, allowing disease management decisions to be made early in the disease cycle (Hayden *et al.* 2004).

The objective of our research was to develop a marker system capable of identifying *P. harknessii* DNA within immature galls. Initially, the internal transcribed spacer (ITS) region of the nuclear rDNA was used as a target for the diagnostic test for *P. harknessii* (Ramsfield and Vogler 2004). A putatively specific primer was developed to work with the universal basidiomycete

© Australasian Plant Pathology Society 2010 10.1071/AP09058 0815-3191/10/030247

primer ITS-4b (Gardes and Bruns 1993); however, the region was not informative enough and *P. harknessii* could not be distinguished from *C. quercuum* f. sp. *fusiforme* (Ramsfield and Vogler 2004). Subsequently, we determined that all of the four formae speciales of *C. quercuum* (Burdsall and Snow 1977) are amplified by the ITS diagnostic primer set developed by Ramsfield and Vogler (2004). The study reported here was conducted to develop a more specific marker system that could be used to diagnose *P. harknessii* infection before sporulation.

Materials and methods

Collection of fungal material

In May and June 2002, branches of lodgepole pine (*Pinus contorta* var. *latifolia*), ponderosa pine (*P. ponderosa*), and shore pine (*P. contorta* var. *contorta*) that were infected by *P. harknessii* and had intact peridia, or a recently ruptured peridial membrane, as well as aeciospore samples of *P. harknessii*, *Cronartium coleosporioides* and *C. comandrae* were collected. Samples were collected from 27 sites, representing a transect across southern British Columbia, Canada. If there was evidence of hyperparasitism, no sample was collected to avoid DNA extraction from mixed samples. In the laboratory, aeciospores were removed from galls by rupturing the peridial layer, if required, and tapping the aeciospores into sterilised weigh boats. Aeciospores were then separated from contaminating wood and debris by sieving through nylon mesh with a 1-mm pore size, followed by further sieving through 105-micron mesh (Small Parts Inc., Miami Lakes, FL, USA). Sieved aeciospores were stored in cryovials at −80°C until DNA was extracted. *Cronartium* spp. and *P. harknessii* aeciospores were also obtained from collections at the Institute of Forest Genetics, USDA Forest Service, Placerville, CA, and at the Southern Research Station, USDA Forest Service, Asheville, NC (Table 1).

Extraction of DNA

DNA was extracted from aeciospores of *P. harknessii*, *C. coleosporioides*, and *C. comandrae* using the minipestle (Pellet Pestles from Kontes-Kimble, Vineland, NJ, USA)/ diatomaceous earth method of Zambino (2002). DNA was also isolated from branch galls on *P. contorta* var. *latifolia* and *P. contorta* var. *contorta* and fresh leaders of *P. contorta* var. *latifolia*, *P. contorta* var. *contorta*, and *P. ponderosa* to provide samples that included host and pathogen DNA and pure host DNA, respectively, using the 2× CTAB DNA extraction protocol of Vogler and Bruns (1998). The method was subtly modified as follows: outer bark was removed using a sterile scalpel, and inner tissues were cubed and then frozen and ground to a fine powder in liquid nitrogen. This method was also used to extract DNA from aeciospores of *C. quercuum* f. sp. *fusiforme*, *C. quercuum* f. sp. *banksianae*, *C. quercuum* f. sp. *virginianae*, *C. quercuum* f. sp. *echinatae*, *C. ribicola*, *C. strobilinum*, *C. occidentale*, *P. filamentosum*, and *P. bethelii.* DNA of *P. harknessii* from Quebec, Canada and *C. quercuum* f. sp. *fusiforme* from the south-eastern United States and DNA from *P. radiata* from New Zealand was provided.

Ribosomal DNA PCR amplification and sequencing

The first intergenic spacer region (IGS-1) of *P. harknessii*, *C. comandrae*, *C. coleosporioides*, *C. quercuum* f. sp. *fusiforme*, *C. quercuum* f. sp. *echinatae*, *C. quercuum* f. sp. *virginianae* and *C. quercuum* f. sp. *banksianae*, between the 28s rRNA and the 5s rRNA, was amplified using the PCR primer pair H (5′-CCTCGATGTCGGCTCTTC-3′) (Buchko and Klassen 1990) and 5B (5′-AGGATTCCCGCGTGGTCCCC-3′) (Moricca and Ragazzi 1998). PCR conditions for IGS-1 amplification were as follows: 0.5 μM forward primer, 0.5 μM reverse primer, 200 μM dNTP, and 0.5 U *Taq* DNA polymerase (Roche Applied Science, Mannheim, Germany), the supplied Roche buffer with a final $MgCl_2$ concentration of 1.5 mM, and 1.0 ng of target DNA. The PCR amplification protocol was 94°C for 5 min, followed by 35 cycles of 94°C for 1 min, 55°C for 1 min and 72°C for 3 min with a final extension of 72°C for 8 min. Following PCR amplification, PCR products were cloned and sequenced as follows: PCR products were purified using StrataPrep PCR purification columns (Stratagene, La Jolla, CA, USA), ligated into the pPCR-Script Amp vector (Stratagene), inserted into XL1-Blue MRF′ Kan electroporation-competent cells (Stratagene), and sequenced using M-13 forward and reverse primers on an ABI 3100 automated sequencer (Applied Biosystems, Foster City, CA, USA). Due to the large size of the first IGS, it was necessary to design two internal PCR primers that were used to initiate DNA sequencing reactions (5′ to 3′ direction) to capture the entire

Table 1. Intergenic spacer region sequences generated in this study

Organism	Host	Location	Isolate number	GenBank accession
Peridermium harknessii	*Pinus ponderosa*	Kelowna, BC, CAN	E.har9	EF579743
P. harknessii	*P. contorta* var. *latifolia*	Bridesville, BC, CAN	E.har112	EF579744
P. harknessii	*P. contorta* var. *contorta*	Qualicum Beach, BC, CAN	E.harHL3	EF579745
P. harknessii	*P. radiata*	Lafayette, CA, USA	Ph 7–03.2	EF579746
Cronartium quercuum f. sp. *fusiforme*	*P. taeda*	Longview, TX, USA	Cqf23–4	EF579747
C. quercuum f. sp. *fusiforme*	*P. taeda*	Savannah, GA, USA	Cqf4–2	EF579748
C. quercuum f. sp. *echinatae*	*P. echinata*	Georgia, USA	Cqe67	EF579749
C. quercuum f. sp. *virginianae*	*P. virginiana*	Georgia, USA	Cqv85	EF579750
C. quercuum f. sp. *banksianae*	*P. banksiana*	Minnesota, USA	CqbMn-4	EF579751
C. comandrae	*P. contorta* var. *latifolia*	Ashcroft, BC, CAN	C.com	EF579752
C. coleosporioides	*P. contorta* var. *latifolia*	Princeton, BC, CAN	C.col	EF579753

IGS-1 sequence that was ligated into the plasmid (IGS-1F: 5′-GCTAATCAGGTGGAAAG-3′ and IGS-1–720: 5′-TTGCA CAAGGAGAAAGTC-3′). The entire IGS-1 sequence was constructed by aligning overlapping DNA sequence data. The IGS-1 from four different isolates of *P. harknessii* (one infecting *P. contorta* var. *contorta*, one infecting *P. contorta* var. *latifolia*, one infecting *P. ponderosa* and an isolate from California) was sequenced. The IGS-1 of one isolate of each formae speciales of *C. quercuum* and one isolate each of *C. comandrae* and *C. coleosporioides* was also sequenced. All IGS-1 sequences generated in this study were submitted to GenBank (Table 1).

P. harknessii *primer design*

PCR primers for *P. harknessii* were designed based on regions within the IGS-1 sequence that are conserved in *P. harknessii*, yet variable in closely related *Cronartium* spp., as determined through multiple sequence alignment (Thompson *et al*. 1997). The forward (Phar IGS-1F 5′-TCATGTGGTCA CCCTATC-3′) and reverse (Phar IGS-1R 5′-TGATAGGTT CCCCACCTC-3′) primers were based in these regions and generate a 194-bp product putatively specific to *P. harknessii*. The PCR reaction mix was 0.5 µM Phar IGS-1F, 0.5 µM Phar IGS-1R, 200 µM dNTP, and 0.5 U *Taq* DNA polymerase (Roche Applied Science), the supplied Roche buffer with a final $MgCl_2$ concentration of 1.5 mM, and 1.0 ng target DNA. Thermal cycling conditions were as follows: 94°C for 2 min, followed by 30 cycles of 94°C for 30 s, 53°C for 30 s and 72°C for 1 min and a final extension at 72°C for 7 min.

Specificity testing

DNA extracted from uninfected host material, *P. harknessii* galled tissue from *P. contorta* var. *latifolia* (five galls), *P. contorta* var. *contorta* (two galls), *P. ponderosa* (two galls) and *P. radiata* (six galls) and aeciospores of *P. harknessii* from British Columbia, Quebec and California was tested with the Phar primer combination, as was DNA from the other *Cronartium* spp. and *Peridermium* spp. that we had access to. A total of 77 isolates of *P. harknessii* was tested. To assess the specificity of the PCR primers against other organisms that we did not have access to, each PCR primer and the entire PCR product were submitted separately to GenBank for BLAST searching (Altschul *et al*. 1990) of the nr database using BLASTN. In addition, the forward primer and the reverse complement of the reverse primer were concatenated with NNN and the nr database was searched after modifying the BLAST algorithm parameters as follows: 'automatically adjust parameters for short input sequences' was turned off, word size was set to 7, expect value 1000, BLASTN and the low complexity filter was turned off. *In silico* PCR with the primers Phar IGS-1F and Phar IGS-1R was performed on all available genomes using the UCSC *in silico* PCR web tool (http://genome.ucsc.edu/ accessed 24 November 2009).

Sensitivity determination

The sensitivity of the Phar IGS-1F/Phar IGS-1R PCR primer combination was assessed by serially diluting *P. harknessii* DNA. The following concentrations were used: 1, 0.5, 0.1, 0.05, 0.01, 0.005, 0.001, 0.0005 and 0.0001 ng/µl. To each PCR reaction, 1 µl of template DNA was added and the thermal cycling conditions were 94°C for 2 min, followed by 30 cycles of 94°C for 30 s, 53°C for 30 s and 72°C for 1 min and a final extension at 72°C for 7 min.

In addition to testing the *P. harknessii* PCR primers in a one-step PCR protocol, a nested PCR protocol was also tested to determine if the sensitivity of detection could be increased. The nested PCR protocol used conserved PCR primers H and 5B to amplify the IGS-1 from 1 µl of the serially diluted template DNA. The first-round thermal cycling conditions were 94°C for 5 min, followed by 35 cycles of 94°C for 1 min, 55°C for 1 min and 72°C for 3 min with a final extension of 72°C for 8 min. First-round PCR products were diluted 1/100 with sterile H_2O and 1 µl of the diluted PCR products was utilised as template DNA for the second-round PCR reaction using the *P. harknessii* PCR primer combination Phar IGS-1F/Phar IGS-1R. Thermal cycling conditions of the second round were 94°C for 2 min, followed by 30 cycles of 94°C for 30 s, 65°C for 30 s and 72°C for 1 min and a final extension at 72°C for 7 min.

Phylogenetic analyses

The IGS-1 region of *P. harknessii* isolates collected from *P. ponderosa*, *P. contorta* var. *latifolia*, *P. contorta* var. *contorta* and *P. radiata* (California), as well as two isolates of *C. quercuum* f. sp. *fusiforme*, and one isolate each of *C. quercuum* f. sp. *echinatae*, *C. quercuum* f. sp. *virginianae* and *C. quercuum* f. sp. *banksianae*, *C. coleosporioides*, and *C. comandrae* were initially aligned using Clustal W within MEGA 4.0 (Tamura *et al*. 2007). The gap opening and gap extension penalties were adjusted to obtain the best visual alignment. Following alignment, both maximum parsimony (Eck and Dayhoff 1966) and neighbour-joining with 10 000 bootstrap replicates (Saitou and Nei 1987) were performed with MEGA 4.0. In the parsimony analysis, the consensus tree was generated using the close neighbour interchange algorithm (Nei and Kumar 2000). Evolutionary distances in the neighbour-joining analysis were calculated using the maximum composite likelihood method (Tamura *et al*. 2004). Since *C. comandrae* had the most divergent sequence, and was known from previous analyses to be an outgroup to the gall rusts (Vogler and Bruns 1998), we used it to root all trees generated in the analyses.

Results

IGS-1 sequence analysis and PCR primer specificity testing

Sequencing the PCR products generated by primer pair H/5B from *P. harknessii* and the other rust species revealed that the size of the IGS-1, bounded by primers H and 5B, ranged from 1214 bp for *C. comandrae* to 1354 bp for *C. quercuum* f. sp. *fusiforme* (Table 1). The IGS-1 PCR product of *P. harknessii* ranged from 1350 bp to 1352 bp (Table 1). Alignment of the IGS sequences revealed two regions (position 847 and position 1004) within the IGS-1 that were conserved within *P. harknessii*, yet variable in the other rust species (Fig. 1). These polymorphisms were used to design PCR primers Phar IGS-1F and Phar IGS-1R that differentiate *P. harknessii* from *C. quercuum* f. sp. *fusiforme* by anchoring the 3′ end of the

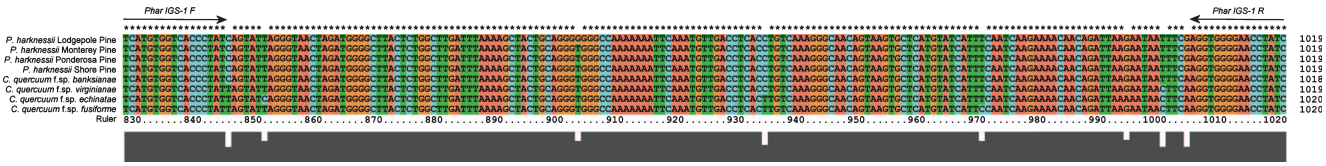

Fig. 1. Alignment of intergenic spacer region (IGS-1) sequence data from four isolates of *Peridermium harknessii* collected from different hosts and from all four formae speciales of *Cronartium quercuum*. Polymorphisms at positions 847 and 1004 were used to anchor the 3′ end of the Phar IGS-1F and Phar IGS-1R PCR primers that were developed in this study.

primers at the polymorphic site. Primer pair Phar IGS-1F/Phar IGS-1R amplified a 194-bp fragment in all 77 samples of *P. harknessii* that were tested. The sample population included *P. harknessii* isolates from throughout British Columbia, Quebec and California.

When DNA from the other *Cronartium* and *Peridermium* rusts in our collection was subjected to PCR with Phar IGS-1F/Phar IGS-1R, the only positive reaction was from *C. quercuum* f. sp. *banksianae*; none of the other rust species tested resulted in the amplification of the 194-bp fragment. The 194-bp fragment

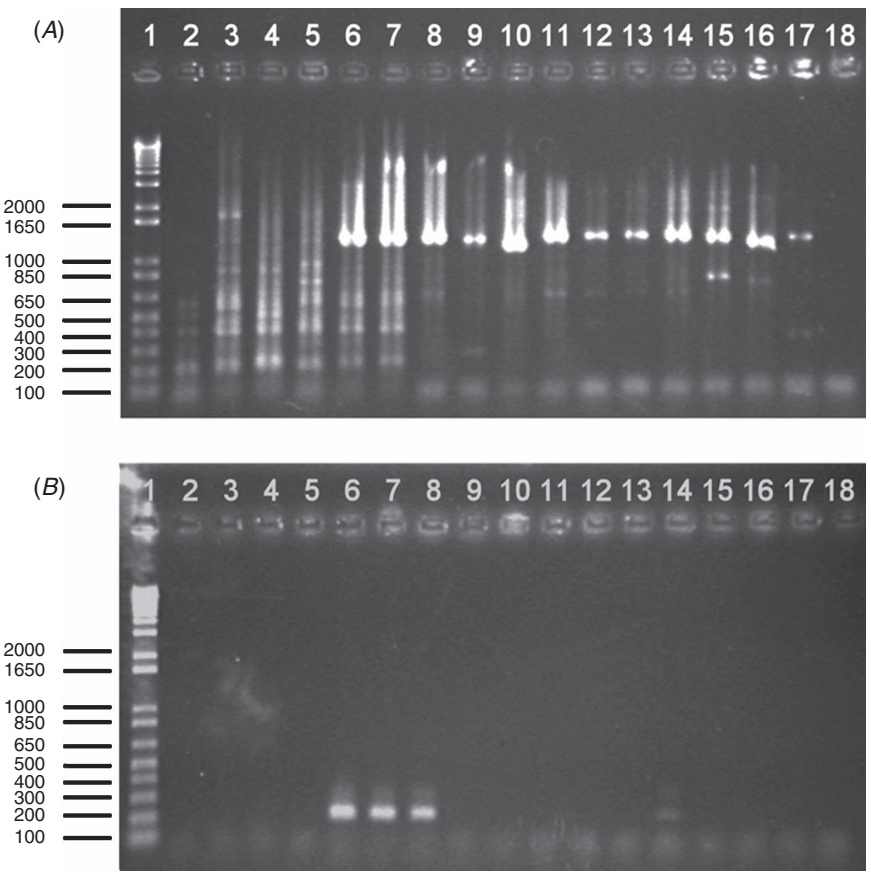

Fig. 2. Intergenic spacer region (IGS-1) and *Peridermium harknessii* PCR results. Panel (*A*) results of IGS-1 PCR amplification with H/5B primer set. Panel (*B*), results of PCR amplification of the same template DNA that was used for panel (*A*) with *P. harknessii* primers Phar IGS-1F and Phar IGS-1R. PCR products in lanes 1–18 in the same order. Lane 1, Invitrogen 1 KB+ ladder. Lane 2, *Pinus contorta* var. *latifolia*. Lane 3, *P. contorta* var. *contorta*. Lane 4, *P. ponderosa*. Lane 5, *P. radiata*. Lane 6, *P. contorta* var. *contorta* infected by *P. harknessii* (+ve). Lane 7, *P. contorta* var. *latifolia* infected by *P. harknessii* (+ve). Lane 8, *P. harknessii* spores. Lane 9, *Cronartium coleosporioides*. Lane 10, *C. comandrae*. Lane 11, *C. quercuum* f. sp. *fusiforme*. Lane 12, *C. quercuum* f. sp. *echinatae.* Lane 13, *C. quercuum* f. sp. *virginianae*. Lane 14, *C. quercuum* f. sp. *banksianae*. Lane 15, *C. ribicola*. Lane 16, *P. filamentosum*, Lane 17, *P. bethelii*. Lane 18, water (negative control). The presence of the IGS-1 PCR product in lanes 6–17 of panel (*A*) indicate that the DNA is amplifiable; therefore, the absence of the 194-bp PCR product in lanes 9–13 and 15–17 of panel (*B*) indicates that the primers do not cross react with those species.

was also present when DNA extracted from galled tissue was amplified from infected *P. contorta* var. *latifolia*, *P. contorta* var. *contorta* (Fig. 2*A*, *B*), *P. ponderosa* and *P. radiata* using the Phar IGS-1F/Phar IGS-1R primer set (data not shown). The absence of a 194-bp amplification product from the host DNA indicated that these PCR primers did not amplify DNA from any of the uninfected host template DNA (Fig. 2*B*). When the PCR primer sequences and the sequence of the target PCR product were submitted to GenBank, the only significant matches that were made were with DNA sequence data that was deposited from this study. The individual oligo sequences matched bacterial, mammalian, fungal and plant sequences, but only *P. harknessii* was a 100% match over the entire length of the oligos. When the 194-bp PCR product was submitted for BLAST analysis, the best non-*Peridermium* or *Cronartium* match was with *Puccinia melanocephala* (FJ009329), where 43 bp of a 53-bp portion matched the PCR product. When Phar IGS-1F and the reverse complement of the Phar IGS-1R were concatenated with NNN and submitted for BLAST analysis, only sequence data from *P. harknessii* and the four formae speciales of *C. quercuum* submitted from this study resulted in potential PCR products. When *in silico* PCR was conducted, no PCR products were generated with the Phar IGS-1F/Phar IGS-1R primer set from any of the genomes that are available on the UCSC web tool for testing (as at November 2009).

The sensitivity of the PCR primer set Phar IGS-1F/Phar IGS-1R was determined with a dilution series of *P. harknessii* DNA. The minimum amount of template DNA that allowed visualisation of the PCR products on an agarose gel was 0.01 ng (Fig. 3*A*). When the nested PCR protocol that used conserved primer combination H/5B in the first round of the PCR reaction, and the primers Phar IGS-1F/Phar IGS-1R, to amplify 1/100 dilutions of the first-round PCR products in the second round of amplification, the minimum amount of initial template DNA that allowed visualisation on an agarose gel was 0.0001 ng (Fig. 3*B*). Thus, the nested PCR protocol increased the sensitivity of detection 100-fold from 10 pg to 0.1 pg of template DNA.

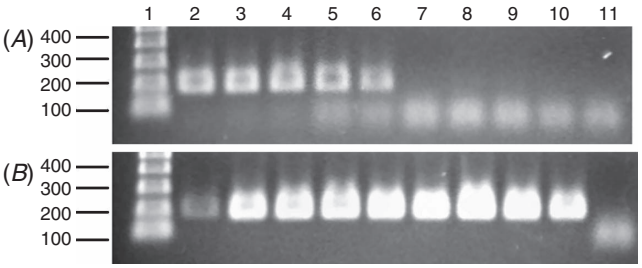

Fig. 3. Determination of assay sensitivity. Panel (*A*) PCR primer set Phar IGS-1F/Phar IGS-1R one-step PCR reaction results. Panel (*B*) Second-round PCR results using PCR primer set Phar IGS-1F/Phar IGS-1R to amplify DNA from 1/100 dilutions of first-round PCR products generated by IGS-1 PCR primer set H/5B. Initial DNA template was: Lane 2, 1.0 ng. Lane 3, 0.5 ng. Lane 4, 0.1 ng. Lane 5, 0.05 ng. Lane 6, 0.01 ng. Lane 7, 0.005 ng. Lane 8, 0.001 ng. Lane 9, 0.0005 ng. Lane 10, 0.0001 ng. Lane 11, water (negative control). Lane 1. Invitrogen 1 KB+ DNA ladder. Limit of detection of one-step PCR protocol (panel *A*) was 10 pg, limit of detection of nested PCR protocol (panel *B*) was 0.1 pg. Primer dimer present in panel (*A*), lanes 5–11; panel (*B*), lane 11.

Phylogenetic analyses

Both maximum parsimony (Fig. 4) and neighbour-joining analyses (Fig. 5) of the IGS-1 sequence data clearly showed that *C. quercuum* f. sp. *banksianae* is the closest relative of *P. harknessii*. The phylogenetic topology generated by both analyses was the same; however, the neighbour-joining analysis clearly shows variation within the IGS-1 of *P. harknessii*.

Discussion

Western gall rust is a serious disease of some pines in subgenus *Pinus*, including *P. radiata*, which is planted extensively in southern hemisphere plantations (Parmeter and Newhook 1967; Old 1981, 1985; Old *et al*. 1986; van der Kamp 1989; Ramsfield and Vogler 2004; Ramsfield *et al.* 2007). If the pathogen were to arrive in the southern hemisphere, the autoecious nature of the pathogen would assure pine-to-pine

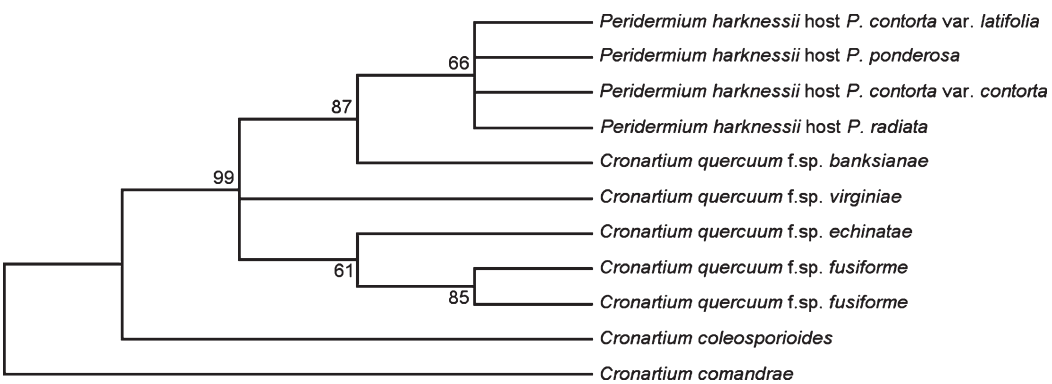

Fig. 4. Bootstrap consensus tree of evolutionary history inferred using maximum parsimony. Consensus tree of 37 most parsimonious trees generated using close-neighbour-interchange algorithm. Percentage of parsimonious trees in which the associated taxa clustered together in the bootstrap test (10 000 replicates) are shown next to the branches. There was a total of 1205 positions in the final dataset, 34 of which were parsimony informative.

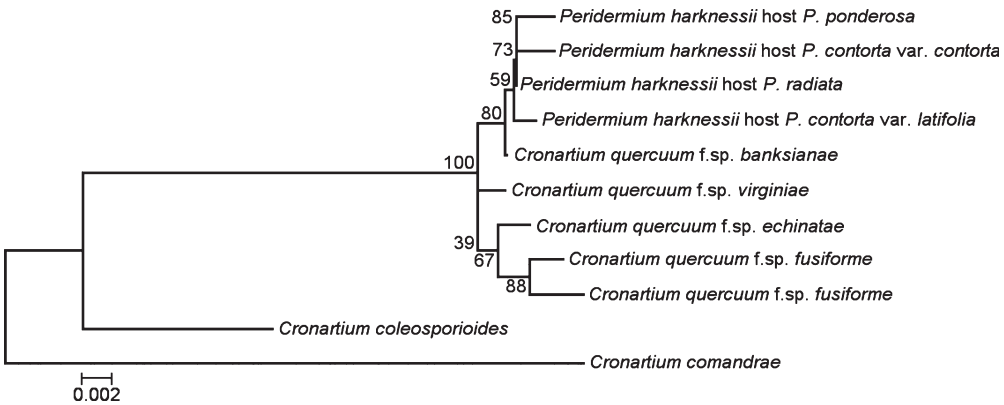

Fig. 5. Bootstrap consensus tree of evolutionary history inferred using neighbour-joining. The percentage of replicate trees in which the taxa clustered together (10 000 bootstrap replications) are shown next to the branches. Tree is drawn to scale and the scale bar represents the number of base substitutions per site. There was a total of 1205 positions in the final dataset.

transmission of the disease if the pathogen were not identified until after sporulation on galls, at which time the economic impact might be large (Old 1981; Ramsfield *et al.* 2007). A DNA-based diagnostic test able to positively identify the presence of the pathogen within non-sporulating galls would allow an incursion response to be initiated before sporulation of the pathogen, thus reducing the potential for spread and intensification of the disease (Ramsfield and Vogler 2004; Ramsfield *et al.* 2007). Containing an outbreak of western gall rust in an exotic pine plantation, where it was not detected for at least a year after first sporulation, would be extremely difficult, if not impossible, in the event that not all galls were removed before sporulation given the number of aeciospores produced on each gall is large (Old 1981).

The Phar IGS-1F/Phar IGS-1R primer set developed in this study can be utilised to detect the presence of *P. harknessii* within galled tissue using either a single-step PCR protocol or a nested PCR protocol for increased sensitivity. In an incursion response scenario where suspect non-sporulating galls require testing, the nested PCR protocol should be followed. If aeciospores were discovered and DNA was extracted from aeciospores, the single-step PCR protocol has been demonstrated to be sensitive enough to identify the pathogen. If no PCR products were generated by the Phar IGS-1F/Phar IGS-1R primer set, PCR amplification should be attempted with the conserved PCR primer set H/5B to ensure that the DNA is amplifiable. If DNA were extracted from galled tissue and the results were negative, amplification with conifer PCR primers such as the chloroplast-located ribulose bisphosphate carboxylase/oxygenase gene primers of Marler *et al*. (1999) should be used to amplify host DNA. These PCR tests are required in the event of a negative Phar IGS-1F/Phar IGS-1R PCR reaction in order to demonstrate that the result is a true negative for the presence of *P. harknessii*, rather than a false negative that occurred as a result of PCR failure due to poor quality DNA.

The finding that the Phar IGS-1F/Phar IGS-1R primer set developed in this study cross-reacted with *C. quercuum* f. sp. *banksianae* is not surprising, given that it has been hypothesised that *C. quercuum* f. sp. *banksianae* is the closest relative of *P. harknessii* (Vogler and Bruns 1998). The phylogenetic analyses conducted in this study, on a region of the genome that has yet to be studied in the *Cronartium* rusts, provide further evidence to support this hypothesis. Although the primers developed in this study cross-reacted with the closest relative of *P. harknessii*, none of the other rusts that were tested, including the other formae speciales of *C. quercuum*, generated a 194-bp PCR product. This is an improvement over the initial ITS-based system (Ramsfield and Vogler 2004), which cross-reacted with all formae speciales of *C. quercuum* (T. D. Ramsfield, unpubl. data). Experimental evidence from this study indicates that the specificity of the test is such that, if a 194-bp band were generated, it can be assumed that either *P. harknessii* or *C. quercuum* f. sp. *banksianae* is present in the sample. This assumption is based on the fact that we have tested the closest relatives of *P. harknessii*, based on the previous work of Vogler and Bruns (1998). BLAST analysis of the PCR product and *in silico* PCR suggest that the potential for cross-reaction of the PCR primer set with other organisms is low. Unfortunately, whole genome resources for close relatives to the rusts are limited at this time, and without access to all of the *Cronartium* spp. for empirical testing, a positive result with the Phar IGS-1F/Phar IGS-1R PCR primers should be confirmed by DNA sequencing. Confirmation of the identity of the organism can be achieved by PCR amplifying and sequencing the IGS-1 of the pathogen with the primers H and 5B; primers H and 5B will amplify only fungal DNA from a sample composed of mixed host and fungal DNA (T. D. Ramsfield, unpubl. data). Irrespective of the result of the IGS-1 sequencing neither *P. harknessii* nor *C. quercuum* f. sp. *banksianae* is present in the southern hemisphere; therefore, an incursion response would be prudent.

The extent of susceptible pine plantations in the southern hemisphere, and the risk associated with the autoecious *P. harknessii*, offer a powerful impetus for this research. Our method provides a rapid and sensitive technique that can be used by regulators to confirm the presence of an exotic pine gall rust fungus.

Acknowledgements

The authors would like to thank Dr Tom Kubisiak, USDA Forest Service, Southern Research Station, Carol Young of the Fusiform Rust Resistance Screening Centre, François Paradise and Dr Richard Hamelin of Laval University and the Canadian Forest Service, respectively, and Dr Richard Hunt of the Canadian Forest Service for supplying aeciospores from related rust species. Thank you to Dr Paul Zambino for sharing his DNA extraction method. Dr Simon Shamoun provided laboratory facilities at the Pacific Forestry Centre in Victoria where the majority of DNA for this study was extracted. Funding for this project was provided by the New Zealand Foundation for Research Science and Technology and the Forest Biosecurity Research Council of New Zealand.

References

Allen EA, Blenis PV, Hiratsuka Y (1988) Axenic culture of *Endocronartium harknessii. Mycologia* **80**, 120–123. doi:10.2307/3807504

Altschul SF, Gish W, Miller W, Myers EW, Lipman DJ (1990) Basic local alignment search tool. *Journal of Molecular Biology* **215**, 403–410.

Buchko J, Klassen GR (1990) Detection of length heterogeneity in the ribosomal DNA of *Pythium ultimum* by PCR amplification of the intergenic region. *Current Genetics* **18**, 203–205. doi:10.1007/BF00318381

Burdsall HH, Snow GA (1977) Taxonomy of *Cronartium quercuum* and *C. fusiforme. Mycologia* **69**, 503–508. doi:10.2307/3758553

Eck RV, Dayhoff MO (1966) 'Atlas of protein sequence and structure.' (National Biomedical Research Foundation: Silver Springs, MA)

Gardes M, Bruns TD (1993) ITS primers with enhanced specificity for basidiomycetes – application to the identification of mycorrhizae and rusts. *Molecular Ecology* **2**, 113–118. doi:10.1111/j.1365-294X.1993.tb00005.x

Hayden KJ, Rizzo D, Tse J, Garbelotto M (2004) Detection and quantification of *Phytophthora ramorum* from California forests using a real-time polymerase chain reaction assay. *Phytopathology* **94**, 1075–1083. doi:10.1094/PHYTO.2004.94.10.1075

Hosking G, Carson M, Dick M (1999) Biosecurity strategies for the pitch canker threat to New Zealand's plantation forests. In 'Current and potential impacts of pitch canker in radiata pine'. CSIRO Australia, Forestry and Forest Products, Technical Report No. 112. (Eds ME Devy, AC Matheson, TR Gordon) pp. 6–11.

Lundquist JE, Walla JA, Tuskan GA (1994) Characteristics of *Peridermium harknessii* in axenic culture. *Canadian Journal of Forest Research* **24**, 1345–1353. doi:10.1139/x94-175

Marler M, Pedersen D, Mitchell-Olds T, Callaway RM (1999) A polymerase chain reaction method for detecting dwarf mistletoe infection in Douglas-fir and western larch. *Canadian Journal of Forest Research* **29**, 1317–1321. doi:10.1139/cjfr-29-9-1317

Moricca S, Ragazzi A (1998) Use of RFLP and SSCP analysis to differentiate the pine rusts *Cronartium flaccidum* and *Peridermium pini. Mycological Research* **102**, 666–670. doi:10.1017/S0953756297005467

Nei M, Kumar S (2000) 'Molecular evolution and phylogenetics.' (Oxford University Press: New York)

Old KM (1981) Western gall rust, a serious disease of *Pinus radiata* in California. *Australian Forestry* **44**, 178–184.

Old KM (1985) Western gall rust of pines. In 'Pests and parasites as migrants'. (Eds AJ Gibbs, HRC Meischke) pp. 160–163. (Cambridge University Press: Cambridge)

Old KM, Libby WJ, Russell JH, Eldridge KG (1986) Genetic variability in susceptibility of *Pinus radiata* to western gall rust. *Silvae Genetica* **35**, 145–159.

Parmeter JR, Newhook FJ (1967) New Zealand *Pinus radiata* is susceptible to western gall rust disease. *New Zealand Journal of Forestry* **12**, 200–201.

Peterson RS (1960) Development of western gall rust in lodgepole pine. *Phytopathology* **50**, 876–881.

Ramsfield TD, Vogler DR (2004) DNA-based detection of western gall rust. *New Zealand Plant Protection* **57**, 146–150.

Ramsfield TD, Kriticos DJ, Vogler DR, Geils BW (2007) Western gall rust – a threat to *Pinus radiata* in New Zealand. *New Zealand Journal of Forestry Science* **37**, 143–152.

Saitou N, Nei M (1987) The neighbour-joining method: a new method for reconstructing phylogenetic trees. *Molecular Biology and Evolution* **4**, 406–425.

Tamura K, Nei M, Kumar S (2004) Prospects for inferring very large phylogenies by using the neighbour-joining method. *Proceedings of the National Academy of Sciences of the United States of America* **101**, 11030–11035. doi:10.1073/pnas.0404206101

Tamura K, Dudley J, Nei M, Kumar S (2007) MEGA4: Molecular Evolutionary Genetics Analysis (MEGA) software version 4.0. *Molecular Biology and Evolution* **24**, 1596–1599. doi:10.1093/molbev/msm092

Thompson JD, Gibson TJ, Plewniak F, Jeanmougin F, Higgins DG (1997) The ClustalX windows interface: flexible strategies for multiple sequence alignment aided by quality analysis tools. *Nucleic Acids Research* **25**, 4876–4882. doi:10.1093/nar/25.24.4876

Turner JA, Bulman LS, Richardson B, Moore JR (2004) Cost-benefit analysis of biosecurity and forest health research. *New Zealand Journal of Forestry Science* **34**, 324–343.

van der Kamp BJ (1989) The relative susceptibility of scots and lodgepole pine to western gall rust. *European Journal of Forest Pathology* **19**, 274–280. doi:10.1111/j.1439-0329.1989.tb00263.x

Vogler DR, Bruns TD (1998) Phylogenetic relationships among the pine stem rust fungi (*Cronartium* and *Peridermium* spp.). *Mycologia* **90**, 244–257. doi:10.2307/3761300

Zambino PJ (2002) Dry grinding at near-ambient temperatures for extracting DNA from rust and other fungal spores. *BioTechniques* **33**, 48–51.

Manuscript received 3 September 2009, accepted 14 December 2009