Remote Sensing and Control of an Irrigation System Using a Distributed Wireless Sensor Network

Yunseop (James) Kim, *Member, IEEE*, Robert G. Evans, and William M. Iversen

***Abstract*—Efficient water management is a major concern in many cropping systems in semiarid and arid areas. Distributed in-field sensor-based irrigation systems offer a potential solution to support site-specific irrigation management that allows producers to maximize their productivity while saving water. This paper describes details of the design and instrumentation of variable rate irrigation, a wireless sensor network, and software for real-time in-field sensing and control of a site-specific precision linear-move irrigation system. Field conditions were site-specifically monitored by six in-field sensor stations distributed across the field based on a soil property map, and periodically sampled and wirelessly transmitted to a base station. An irrigation machine was converted to be electronically controlled by a programming logic controller that updates georeferenced location of sprinklers from a differential Global Positioning System (GPS) and wirelessly communicates with a computer at the base station. Communication signals from the sensor network and irrigation controller to the base station were successfully interfaced using low-cost Bluetooth wireless radio communication. Graphic user interface-based software developed in this paper offered stable remote access to field conditions and real-time control and monitoring of the variable-rate irrigation controller.**

***Index Terms*—Automation, control systems, measurement, portable radio communication, sensors, water resources.**

I. Introduction

IRRIGATION is an essential practice in many agricultural cropping systems in semiarid and arid areas, and efficient water applications and management are major concerns. Self-propelled center pivot and linear-move irrigation systems generally apply water quite uniformly; however, substantial variations in soil properties and water availability exist across most fields. In these cases, the ability to apply site-specific irrigation management to match spatially and temporally variable conditions can increase application efficiencies, reduce environmental impacts, and even improve yields. The development of a distributed in-field sensor-based site-specific irrigation system offers the potential to increase yield and quality while saving water, but the seamless integration of sensor fusion, irrigation control, data interface, software design, and communication can be challenging.

Several other researchers have investigated the potential use of feedback from wireless in-field sensing systems to control variable-rate irrigation systems, but few have fully integrated these systems. Miranda *et al.* [1] used a closed-loop irrigation system and determined irrigation amount based on distributed soil water measurements. Shock *et al.* [2] used radio transmission for soil moisture data from data loggers to a central computer logging site. Wall and King [3] explored designs for smart soil moisture sensors and sprinkler valve controllers to implement plug-and-play technology and proposed architectures of distributed sensor networks for site-specific irrigation automation. Perry *et al.* [4] compared the uniformity of sprinkler irrigation with and without sprinkler cycling on and off, and indicated that sprinklers cycling for variable-rate water applications had no effect on uniformity. Software design for automated irrigation control has been studied by Abreu and Pereira [5], who designed and simulated set sprinkler irrigation systems by using computer-aided design software that allowed the design of a simplified layout of the irrigation system.

The coordination of control and instrumentation data is most effectively managed using data networks and low-cost microcontrollers [3]. Adopting a standard interface for sensors and actuators allows reuse of common hardware and communication protocol such as communication interface and control algorithm software. Instrumentation and control standards for RS-232 serial (voltage based) and RS-485 (current based) communication protocols have been widely applied and well documented for integrating sensors and actuators, particularly in industrial applications.

A hard-wired system from in-field sensing stations to a base station takes extensive time and costs to install and maintain. It may not be feasible to hard wire the system for long distances, and it may not be acceptable to growers because it can interfere with normal farming operations. A wireless data communication system can provide dynamic mobility and cost-free relocation. Radio frequency (RF) technology has been widely adopted in consumer wireless communication products, and it provides numerous opportunities to use wireless signal communication in agricultural systems.

Bluetooth wireless technology is an example that has been adapted and used for sensing and control of agricultural systems [6]–[8]. Zhang [7] evaluated Bluetooth radio for different agricultural environments, power consumption, and data transmission rates. Zhang [7] observed 1.4 m as an optimal radio height for a maximum 44-m radio range and reported limitations of significant signal loss after 8 h of continuous battery operation and 2–3 s of transmission latency with the increase of communication range. Oksanen *et al.* [6] used a personal digital assistant equipped with Bluetooth to connect a Global Positioning System (GPS) receiver for their open, generic, and

Manuscript received March 14, 2007; revised July 11, 2007. This work was supported in part by the U.S. Department of Agriculture.

The authors are with the U.S. Department of Agriculture-Agricultural Research Service, Northern Plains Agricultural Research Laboratory, Sidney, MT 59270 USA (e-mail: jkim@sidney.ars.usda.gov).

Color versions of one or more of the figures in this paper are available online at http://ieeexplore.ieee.org.

Digital Object Identifier 10.1109/TIM.2008.917198

0018-9456/$25.00 © 2008 IEEE

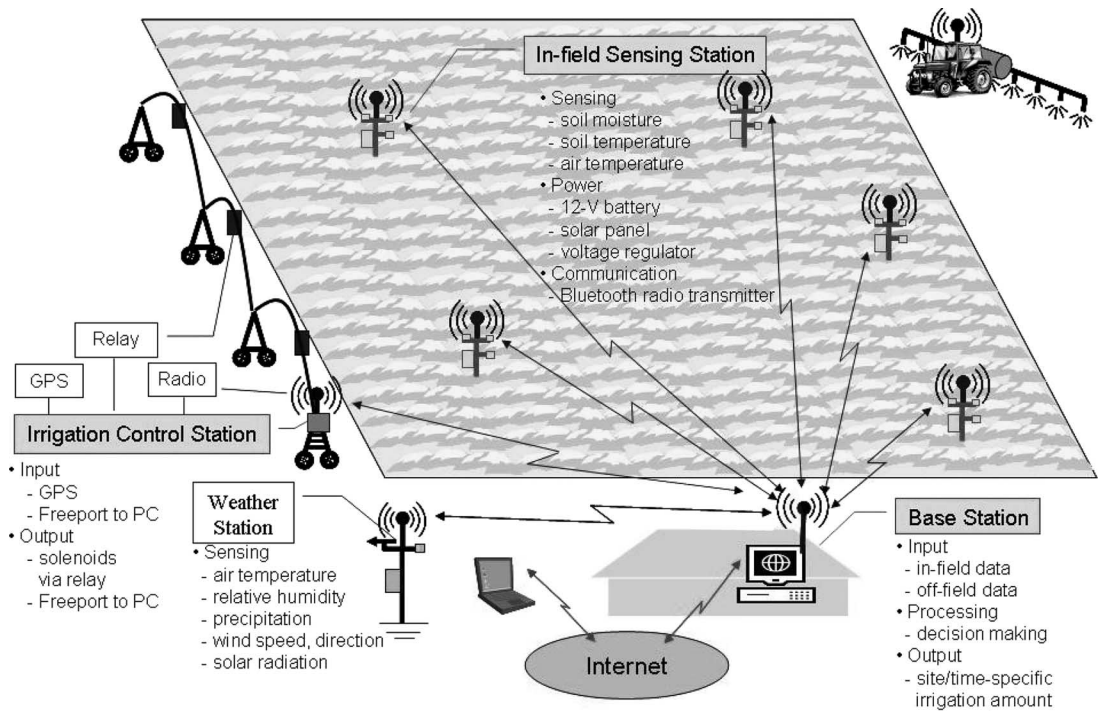

Fig. 1. Conceptual system layout of in-field wireless sensor network for site-specific irrigation.

configurable automation platform for agricultural machinery. Lee *et al.* [8] explored an application of Bluetooth wireless data transmission of the moisture concentration of harvested silage and reported a limitation of a short 10-m range. However, the limitations reported by reviewed publications about Bluetooth applications in agricultural systems can be solved or minimized by a system design optimization. For example, power shortages can be solved by using solar panels that recharge the battery, and the radio range can also be improved by upgrading the power class and antennas.

The development, testing, and use of an integrated distributed wireless sensor network (WSN) that utilizes Bluetooth technology are presented in this paper for sensor-based variable rate irrigation systems. The WSN eliminates the need to hard wire sensor stations across the field and reduces installation and maintenance costs. The WSN uses an *ad hoc* network, i.e., a mobile wireless network. Compared with a wireless local area network (WLAN), *ad hoc* networks have advantages for agricultural applications, because the mobility and self-configuration are more suitable for a distributed sensor network in fields [7]. The objective of this paper is to report the design, construction, and testing of a distributed in-field WSN, a remote sprinkler head valve control, and user-friendly software for real-time in-field sensing and control of a variable rate irrigation system.

II. Materials and Methods

A conceptual system layout of distributed in-field WSN is illustrated in Fig. 1. The system consists of five in-field sensing stations distributed across the field, an irrigation control station, and a base station. The in-field sensing stations monitor the field conditions of soil moisture, soil temperature, and air temperature, whereas a nearby weather station monitors micrometeorological information on the field, i.e., air temperature, relative humidity, precipitation, wind speed, wind direction, and solar radiation. All in-field sensory data are wirelessly transmitted to the base station. The base station processes the in-field sensory data through a user-friendly decision making program and sends control commands to the irrigation control station. The irrigation control station updates and sends georeferenced locations of the machine from a differential GPS mounted at the cart to the base station for real-time monitoring and control of the irrigation system. Based on sprinkler head GPS locations, the base station feeds control signals back to the irrigation control station to site-specifically operate individual sprinkler to apply a specified depth of water.

A. Site-Specific Field Configuration

The spatial variability of agricultural fields has been widely addressed in precision agriculture [10], [11]; however, optimizing field configurations for site-specific management in each field remains a difficult task. The spatial variation of the study site was examined in this paper so that a minimum number of in-field sensor systems could be placed with optimal impact for characterizing the scope of the field information. In this case, the optimal distribution of the in-field sensing stations was determined on the basis of the spatial soil variability [12].

Soil properties such as a water-holding capacity can have a major impact on crop yield [13]. Apparent soil electrical conductivity (EC_a) was used to map the field for its variability, primarily as an indicator of water-holding capacity as well as salinity. EC_a mapping has been widely used as one way to characterize variability of agricultural fields [13]–[15]. The EC_a is a measure of the amount of salt in soil, which is directly

related to the water-holding capacity, and other soil properties such as the percentage of sand, clay, and organic matter.

B. In-Field Sensing Stations

The system components of the in-field sensing stations and weather station contained three main parts: data logging, wireless data communication, and power management. A data logger measured field sensors and was self-powered by a solar panel (SX5, Solarex, Sacramento, CA) that recharged a sealed lead acid 12-V battery (NP7-12, Yuasa Battery Inc., Laureldale, PA) through a voltage regulator (SunSaver-6, Morningstar Corporation, Washington Crossing, PA). The sensory data were transmitted via a Bluetooth radio transmitter that is later described in detail.

1) Data Logging: Field data were logged by a data logger (CR10, Campbell Scientific Inc., Logan, UT) for five in-field sensing stations and one weather station. A peripheral interface was implemented with a nine-pin D-type connector that was converted to a serial communication through an optically isolated RS-232 interface adapter (SC32B, Campbell Scientific Inc.). All six data loggers used in this paper were programmed to read data at the same time and configured at 10 s for scanning and 15 min for the data storage and download.

Two water content reflectometers (CS616, Campbell Scientific Inc.) were horizontally installed at 30- and 60-cm soil depth to measure the volumetric water content of soil. Soil temperature is a useful information to determine how temperature affects the soil water-holding capacity. A temperature probe (107, Campbell Scientific Inc.) measured soil temperature at the 30-cm depth and was also used for air-temperature measurement at the 60-cm height with a solar radiation shield. A humidity probe (HMP35C, Vaisala, Helsinki, Finland) was mounted with a solar radiation shield to measure relative humidity. A pyranometer (LI200X, Licor, Lincoln, NE) was horizontally leveled and provided measures of solar radiation as total flux and flux density.

2) Wireless Data Communication: Most wireless communications follow standard protocols such as the IEEE 802.11, Bluetooth, or Zigbee, which all use spread spectrum radio technology. Spectrum bands of 902–928 MHz, 2.4–2.48 GHz, and 5.7–5.85 GHz have been allocated for license-free spread spectrum devices [16]. The type of wireless standard in this paper was determined by the major factors of distance, data rate, compatibility, and cost. For the application in this paper, the field was located 700 m from the base station, and the data transfer rate required less than 1 kB per cycle in both transmitting and receiving due to a short text string of sensory data. Accommodating existing data loggers and sensors required plug-and-play compatibility to serial devices with cost-effective wireless communication modules. Based on all the requirements for our application, a Bluetooth module was selected for the wireless data communication from the in-field sensing stations to a base station.

Bluetooth is an international standard of short-range wireless communications. The key features of Bluetooth technology are robustness, low power, and low cost. The Bluetooth radio transmission uses a slotted protocol with a Frequency Hopping Spread Spectrum technique in the globally available unlicensed 2.4-GHz Industrial, Scientific, and Medical band. Each device is identified by a globally unique 48-bit address derived from the IEEE 802 standard [17]. Bluetooth's 2.4-GHz hopping frequency system minimizes RF interference from sources such as a WLAN and maximizes user experience. Communication between Bluetooth devices follows a strict master–slave scheme, which is known as a piconet, in which the master defines the timing and the hopping patterns. A master device can simultaneously communicate with up to seven slave devices within a single piconet, and each device can also simultaneously belong to several piconets [18].

A Bluetooth RS-232 serial adaptor (SD202, Initium Company, Sungnam, Korea) was used in this paper for wireless data communication. It was equipped with power class 1 with a power output of 63 mW (18 dBm) and a range of up to 1200 m with patch antennas. The adaptor was interfaced with a nine-pin D-subfemale connector and an antenna port, and powered by 5–12 V with current draw of 40 mA at 9600 b/s Bd rate.

3) Power Management: The efficient use of power is critical for a long-term operational system. Wireless sensor nodes are mostly powered by batteries and require efficient power management for both data scanning from sensors and for wireless data communication. Communication protocol is more helpful in reducing power consumption than in hardware optimization [19].

Power consumption was estimated based on two modes: standby mode that draws power to maintain signal connection and active mode that draws more power to execute signal transmission. Based on a data logger that is running at a scanning interval of 10 s and Bluetooth radio transmission at a downloading interval of 15 min, daily total power consumption was 23.8 Wh. The total power supply from a battery and solar panel was 84 and 20 Wh, respectively. This indicates that the proposed power system will operate for 3.5 days if there is no sunlight. In fact, power dissipation was often observed due to rainy or cloudy days in our experiment during the first stage. When the Bluetooth device lost power slowly and the supply voltage dropped below 5 V, the communication link did not re-establish even after the battery was fully charged by solar radiation. This was caused by a manufacture's hardware design limitation. The power system was redesigned by modifying Bluetooth power management, since the majority of power consumption was used by the Bluetooth standby mode.

C. Irrigation Control Station

1) Plot Design: The wireless variable rate irrigation control and monitoring was implemented on 3.6-ha experimental plots that were laid out in 14 strips in the direction of travel. Each strip was planted with either sugar beet or malting barley, which alternated from year to year. There are a total of 56 plots with the individual plot being 15 m wide and 24 m long, including buffers. Each strip was divided into four plots with two plots being irrigated with midelevation spray application (MESA) and two with low energy precision application (LEPA) that are blocked by replication [9].

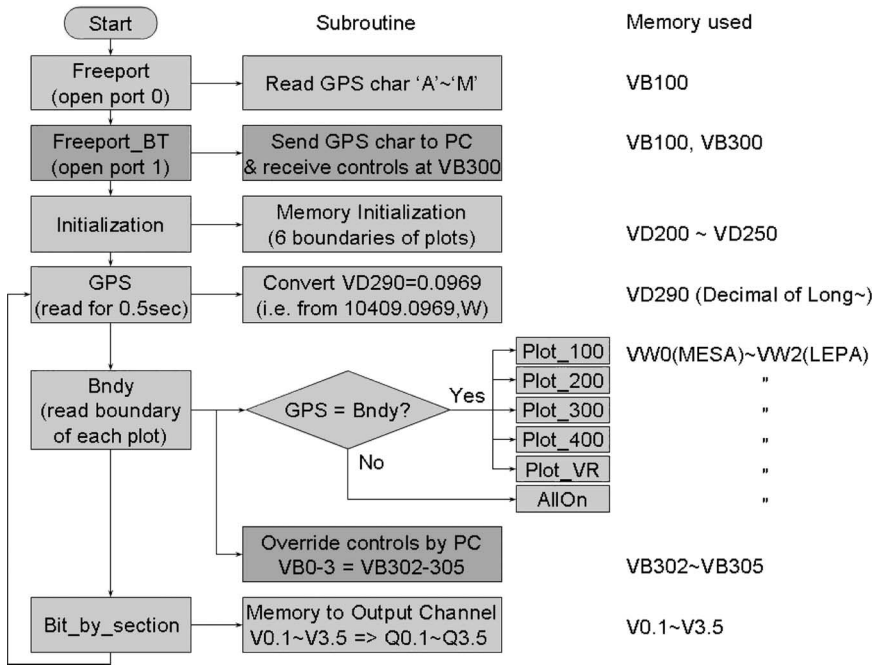

Fig. 2. Algorithm flowchart of PLC program with variable memory used in bits (V), bytes (VB), words (VW), and double words (VD).

2) Linear-Move Irrigation System: A 295-m-long self-propelled linear-move irrigation system (Valley, Valmont Irrigation, Valley, NE) was used for in-field sensor-based variable rate irrigation. It had six towers including the "cart" on one end, on which an industrial diesel engine was mounted and coupled to a water supply pump and an electrical generator (480 V, three-phase) to provide power for the tower motors and cart motors. A buried wire alignment system was used with the antennas located in the middle of the machine. The water supply for the linear-move machine was a screened floating pump intake in a level ditch. Nominal operating pressure was about 250 kPa. Two double direction boom backs were installed at each of the towers. Spans were 49 m in length except for the center span with the guidance system that was a 47-m span. The machine moved at about 2 m/min at the 100% (fastest) setting. A control panel (Valley CAMS Pro, Valmont Irrigation) was used to turn the machine on or off, and to control machine ground speed.

This self-propelled linear-move irrigation system has the capability to apply water using two different irrigation techniques [9]. MESA heads were spaced every 3 m with a spinner sprinkler (S3000, Nelson Irrigation Corporation, Walla Walla, WA) with 103-kPa regulators (#31 nozzles). These heads were about 1 m above the ground on flexible drops with 0.5-kg weights below each regulator. A different head (Quad-Spray, Senninger Irrigation, Inc., Clermont, FL) was used for a LEPA system with 69-kPa regulators (#10 nozzles) and sliding 1-kg weights above each regulator. The drops were spaced every 1.2 m along submanifolds suspended from the truss rods and positioned at about 15 cm above the furrow surface. Water was applied on an alternate-row basis so that each pair of plant rows has a single LEPA nozzle between them. The LEPA heads were lifted above the crop when the MESA heads were operating so as to reduce water distribution interference.

3) Positioning System: The georeferenced location of the sprinklers was obtained for real-time nozzle control and irrigation monitoring. A wide area augmentation system (WAAS)-enabled differential GPS (17HVS, Garmin, Olathe, KS) was used to determine and track machine position as it moved across the plots. It was a compact GPS sensor that included an embedded 12-channel receiver and antenna and utilized WAAS corrections that yielded 3–5-m position accuracy [20]. However, the relatively slow travel speed of the machine allowed frequent averaging of GPS readings that increased accuracy to within 1 m. The GPS was mounted on top of the main cart and continuously updated georeferential information for the sprinklers as the irrigation cart moved across the field. The GPS readings were used to switch water application between the LEPA and MESA heads and to differentially apply water to the different crops or plots depending on treatments.

4) Variable Rate Sprinkler Control: The linear irrigation system used in this paper utilized a basic control and valve system composed of off-the-shelf components. A programmable logic controller (PLC) (S7-226 with three relay expansion modules, Siemens, Johnson City, TN) activated electric over air solenoids (U8325B1V, ASCO, Florham Park, NJ) to control 30 banks of sprinklers. There were 15 banks of side-by-side MESA and LEPA treatments that cover the same areas. The electric solenoid, in turn, activated a pneumatic system to close normally open 1.9-cm plastic globe valves (Model 205, Bermad Inc., Anaheim, CA). In the case of the MESA heads, the valves were located on the gooseneck above each drop to each head in groups of five (15-m width). The air-activated valves were located on three goosenecks that supplied water to submanifolds for the LEPA heads in each 15-m section. The controlling electric solenoid valves were grouped into two clusters of six valves (three MESA and three LEPA) and placed

in a weather-tight plastic enclosure on each cart. Normally open valves were used on the heads since the failure mode would leave the sprinklers on and allowed growers to still irrigate if the system went down.

Air was used as the control fluid, since air is much cleaner than the irrigation water from surface supplies and prevents foreign material in the water supply from plugging the orifices in the sprinkler head control valves. A 0.7-kW three-phase 480-V air compressor was located at the motor/pump cart for easy maintenance with a 9.5-mm line running the length of machine. Small 12-L air reservoirs were located at each tower to ensure rapid and uniform valve operation.

5) Software Design for PLC: The PLC was a micro-PLC equipped with a microprocessor and two RS-485 communication ports that were used for external communications through interface cables (RS-232/PPI, Siemens): one for GPS readings and the other for wireless data transmission to the base computer via the Bluetooth serial adaptor. A PLC software (STEP 7-Micro/WIN 32 ver. 3.2.2.11, Siemens) was used to create and download a program into the PLC via an RS-485 communication port. A touch screen interface to the PLC was also located at the control point.

A PLC program was created to read the GPS current location of the linear irrigation cart, compare it with premeasured boundary positions of the plots, and send control signals to solenoids to activate air valves. Fig. 2 illustrates the algorithm flowchart of the PLC program. Port 0 of the PLC was opened first to read 50 characters in the $GPGGA NMEA sentence streaming from the GPS starting from "**A**" through "**M**," as underlined in the sample data line as follows:

$$\text{GPGG}\underline{\mathbf{A}, 180302, 4743.6219, \text{N}, 10409.0969,}$$
$$\underline{\text{W}, 2, 08, 1.1, 579.7, \mathbf{M}}, , , 1.2, 0000 * 2\text{A}. \quad (1)$$

The GPS data were sent to the base computer via port 1 of the PLC, and sprinkler control signals were returned from the base computer that determined sprinklers on and off based on the updated GPS locations from the control station. The real-time control signals from the base computer overrode default values of sprinkler activation that were preprogrammed in the PLC. The last subroutine program in Fig. 2 was to assign variable memory to 30 output channels of the PLC.

D. Base Station

A base station was located about 700 m from the field and with trees partially blocking the line of sight. A Bluetooth radio patch antenna was mounted on the east side roof of a base station building and connected to a receiver (MSP-102a, Initium Company) beneath the roof via a 1-m extension cable, as shown in Fig. 3. The receiver was a multiserial Bluetooth server wired to a base computer via a 15-m crossed RJ45 cable.

The Bluetooth receiver wirelessly received data from all sensing stations and sent the data to the base computer via Transmission Control Protocol (TCP)/Internet Protocol (IP) Ethernet. Nonlegacy serial applications made the use of the receiver without any modification to the application by using COM port redirector software (Serial/IP ver 4.3.7, Initium Company) that was a serial emulator to provide virtual COM ports and to redirect to TCP socket connection. All Bluetooth devices were paired with the receiver prior to in-field installation. The receiver was configured as a server mode in which the receiver operated as a TCP server on the network. Six Bluetooth devices used in this paper were registered into TCP data ports.

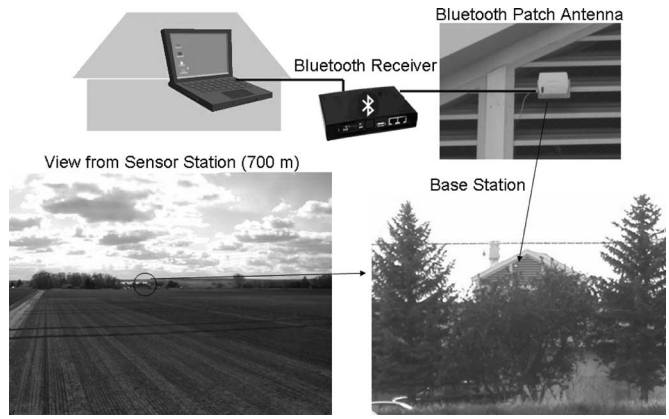

Fig. 3. Base station to communicate with both the sensing station and control station in the field.

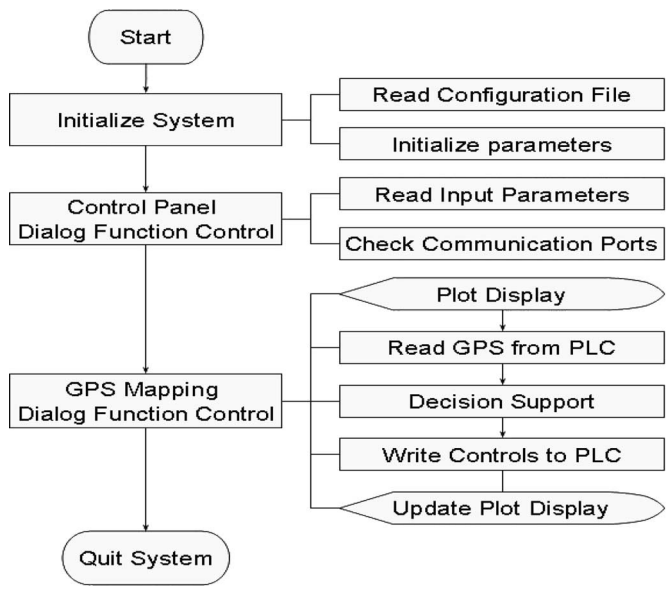

Fig. 4. Algorithm flowchart of WISC software.

1) Software Design for WISC: User-friendly software was developed for real-time control and monitoring of irrigation sprinklers based on graphical user interface. The software enabled the user to read the GPS data from the control station and sensor data from in-field sensing stations and send control signals to the irrigation control station for individual sprinkler operation. The wireless in-field sensing and control (WISC) software was coded by using Microsoft Visual C++.Net (ver. 7.1) as a console application type of Win32 project.

The algorithm flowchart of the WISC program is shown in Fig. 4. The program first initialized a system by reading a configuration file and initializing parameters. A control panel dialog was handled by a function control subroutine that read input parameters and checked communication ports. A GPS mapping dialog followed to display irrigation plots, receive

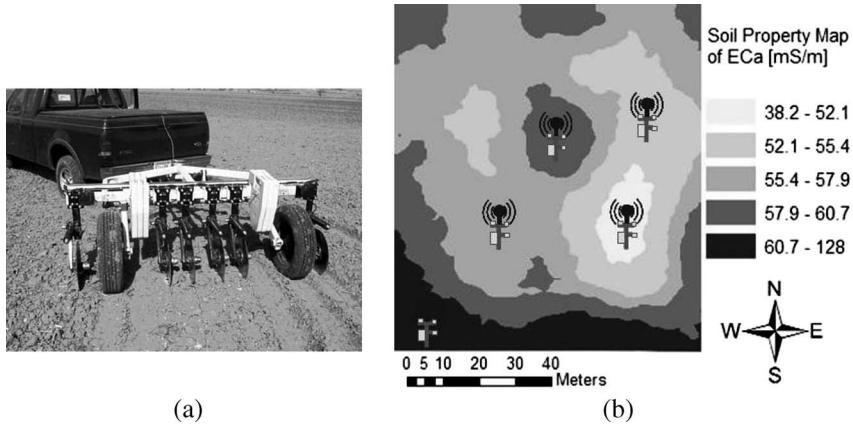

Fig. 5. Site-specific field configuration. (a) Soil profiler for electrical conductivity EC_a. (b) In-field wireless sensor network topology based on soil EC_a map.

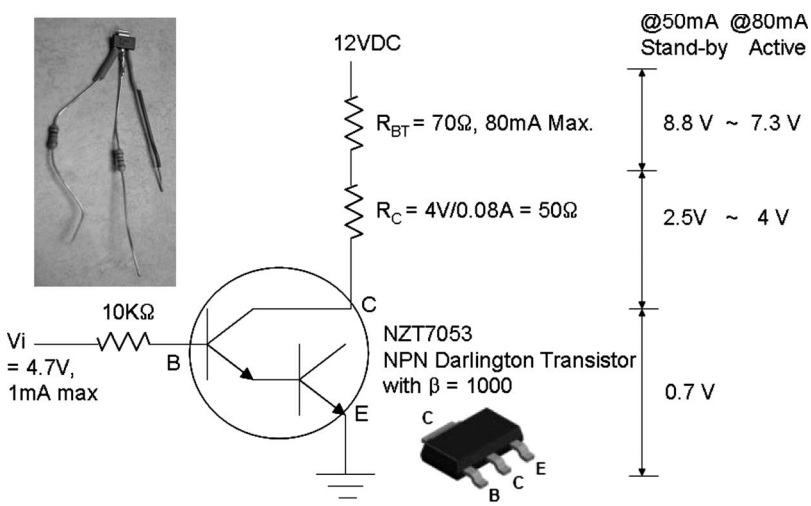

Fig. 6. Amplifier design diagram for a Bluetooth power switch triggered by a program in the data logger through a control port.

GPS readings from the PLC, process the GPS and in-field sensor data for decision making to individual sprinklers, write control signals back to the PLC, and update plot display.

III. Experiments and Results

A. Site-Specific Field Configuration

As mentioned earlier, the apparent soil EC_a was mapped by a soil profiler (3100, Veris Technologies, Salina, KS) with georeferenced points using a differential GPS (Ag132, Trimble, Sunnyvale, CA) on an experimental field [Fig. 5(a)]. Geostatistical analysis was performed by geographic information system software (ArcGIS ver. 9.1, ESRI, Redlands, CA) using a Kriging model to interpolate data and create spatial maps with five classifications by a quantile method. Fig. 5(b) shows the soil EC_a variation from 38.2 to 128 mS/m with five different zones where each in-field sensing station was located.

B. Power Management

Power management for the wireless data communication was redesigned to change the standby mode to a sleep mode, which can save about 19 Wh/day out of a total of 23.8 Wh/day. To selectively turn the power on and off, a Bluetooth power cable was switched to a control port of the data logger. Since a signal at the control port was a digital transistor–transistor logic signal with high impedance, the signal had to be amplified to trigger a transistor. An inverted switch was designed by using an n-p-n bipolar Darlington transistor (NZT5073) to trigger the Bluetooth power, as shown in Fig. 6.

A program was modified in data logger software to trigger control port 3. The control port was triggered to provide Bluetooth power for 2 min. The first minute was a wake-up signal to stabilize connectivity, whereas the second minute was assigned for data transmission. The radio signal connectivity was monitored by Bluetooth software (Promi-MSP, ver. 2.5, Initium Company). The power failure observed without the sleep mode was illustrated in Fig. 7 and solved by deploying the switch circuit for the sleep mode, resulting in stable cycle of power recharge shown at the right side of the dotted line in Fig. 7.

C. Real-Time In-Field Monitoring

An experiment was conducted on a small field at the Eastern Agricultural Research Center, Montana State University, Sidney, MT, during the winter of 2005. Five in-field sensing stations were installed based on the soil property map [Fig. 5(b)] and measured soil moisture and soil temperature. An in-field weather station was also mounted on the linear irrigation cart to monitor micrometeorological information: air

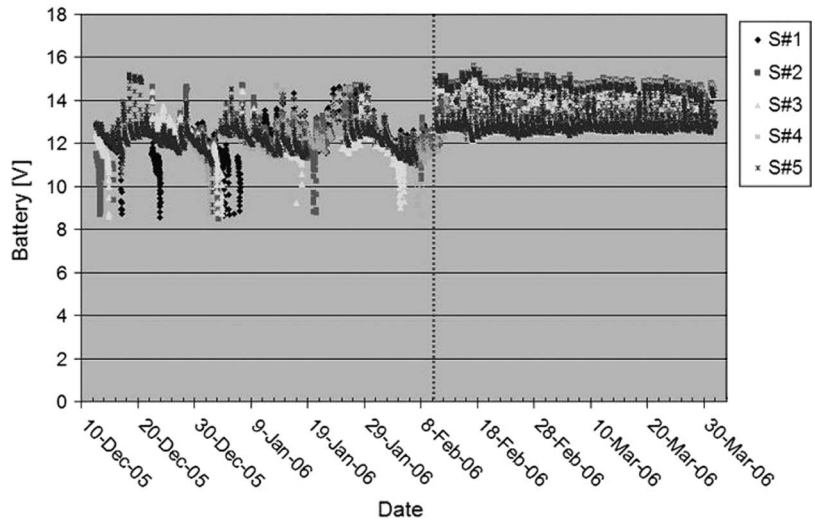

Fig. 7. Power failure without sleep mode (left side of dotted line) and stable power recharging cycle with sleep mode (right side of dotted line).

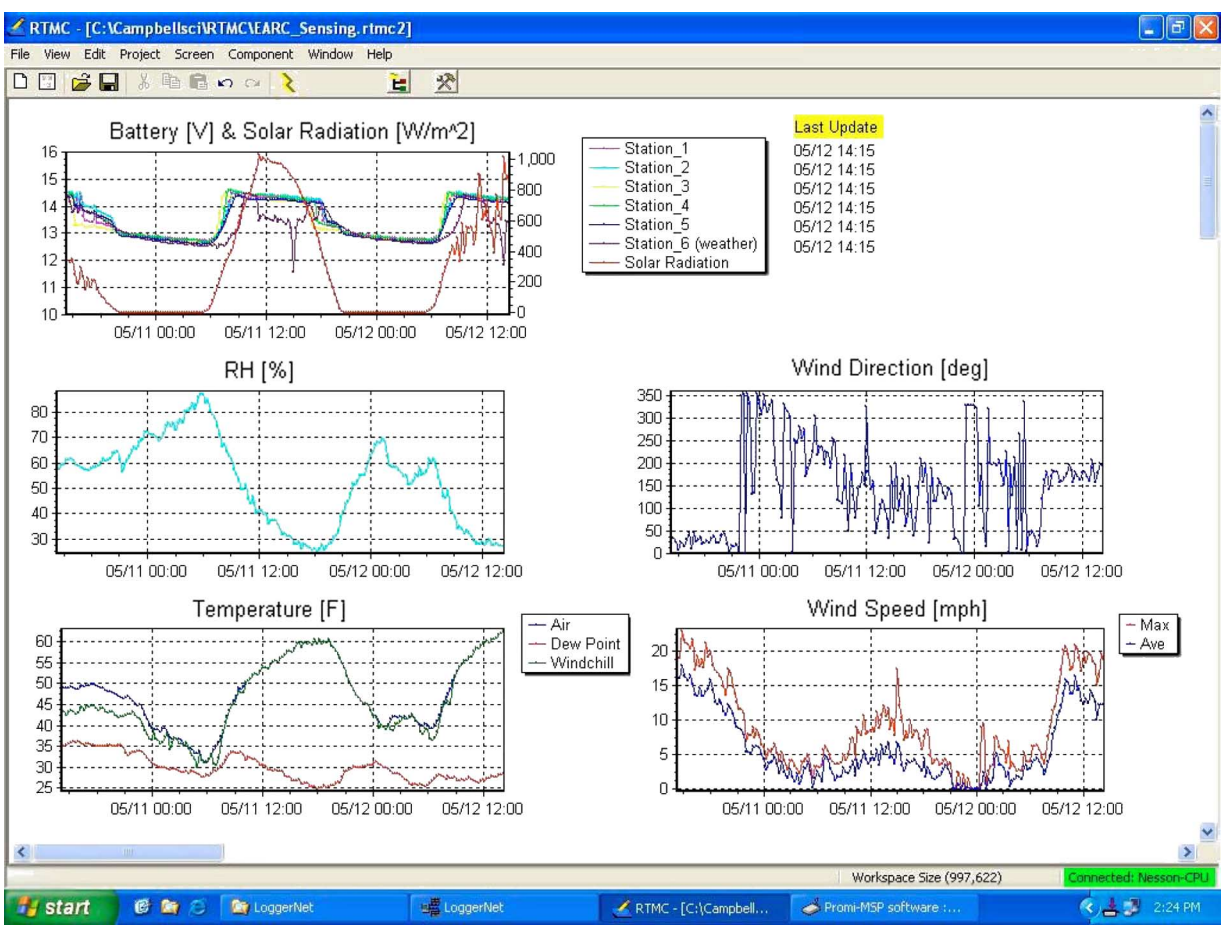

Fig. 8. Display of continuous monitoring of in-field sensing stations. The display updates every 15 min.

temperature, relative humidity, precipitation, wind speed, wind direction, and solar radiation. This stand-alone weather station could also be located in a nearby field. The location of the Bluetooth radio antenna was modified from a 50-cm to a 150-cm height to avoid radio signal interference due to crop canopies during the growing season. All in-field sensory data were scanned every 10 s, stored, and wirelessly transmitted to the base station every 15 min. The base station received the data and displayed field condition using software (RTMC Development ver. 2.0, Campbell Scientific Inc.). Fig. 8 shows a graphical data display of real-time monitoring of the in-field sensing stations.

D. Real-Time Remote Monitoring and Control of Irrigation

The real-time remote monitoring and control of the variable rate irrigation system was implemented by the WISC software.

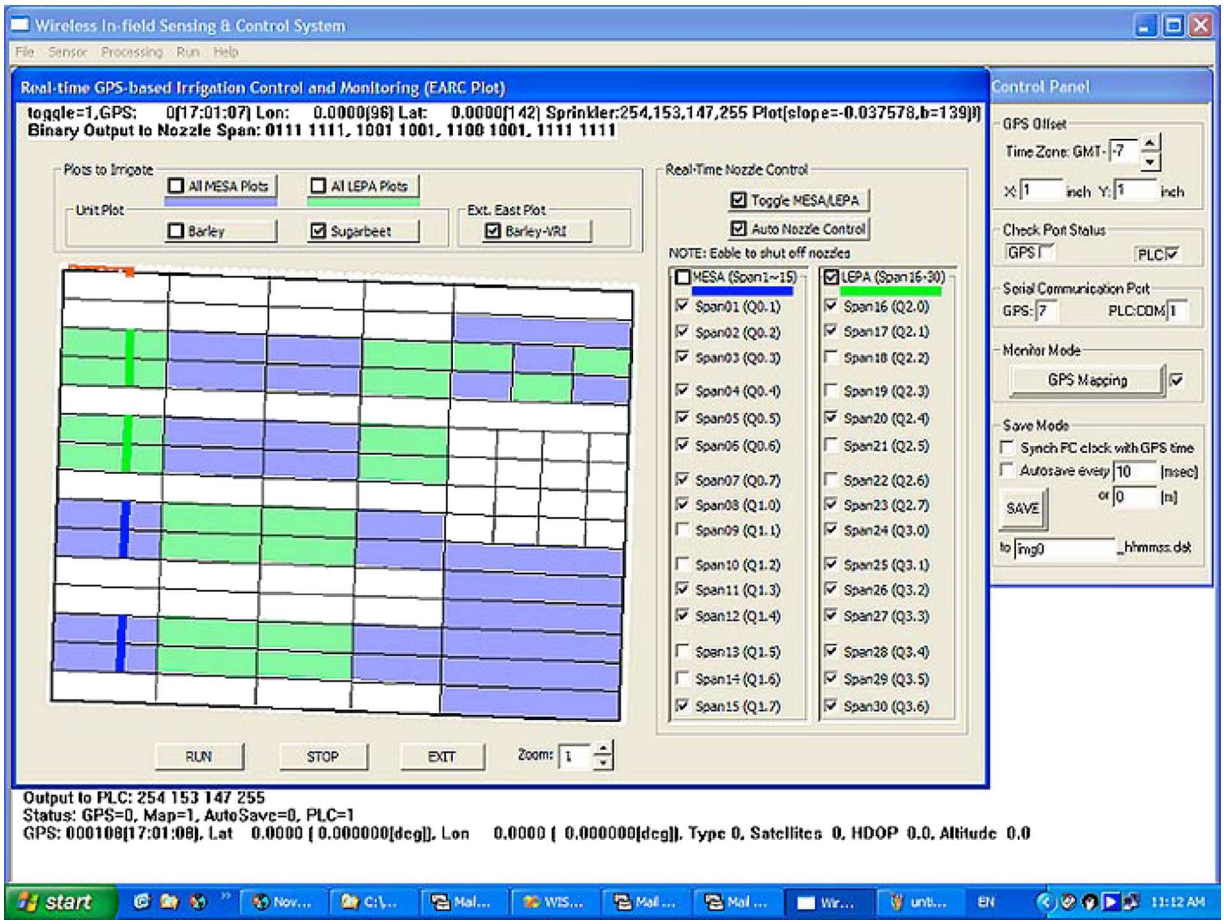

Fig. 9. Display of WISC software for real-time irrigation control and monitoring.

The WISC software displayed two dialog screens: "Control Panel" and "Real-time GPS-based Irrigation Control and Monitoring", as shown in Fig. 9. The "Control Panel" screen allowed local time conversion from GPS's Greenwich mean time based on time zone and displayed the status and number for the communication port to the PLC. It also provided an option to synchronize the base computer time with the GPS for time-sensitive operations and offered automatic data saving based on either GPS travel distance or time.

The "Real-time GPS-based Irrigation Control and Monitoring" screen was activated from a "GPS Mapping" button in the "Control Panel" screen. It displayed GPS information wirelessly transmitted from the PLC and 30 sprinkler outputs to the PLC in 4 B and binary formats on top lines of the screen. The software allowed selecting plots to irrigate on menu buttons above the scaled plot display. The user control of individual sprinkler nozzle spans was also provided by selecting buttons on the list of spans after disabling a default mode of "Auto Nozzle Control". Another default option "Toggle MESA/LEPA" was added to enable toggling MESA and LEPA when selecting either one, which prevented redundant irrigation on the same sites and ensured hydraulic power running through half of the sprinkler spans. All control selections made in the software were updated in real time and wirelessly transmitted to the PLC.

Plots were scaled to display with boundary grids based on crops (sugar beet or barley), and each plot was colorized based on irrigation sprinkler types (light blue for MESA and light green for LEPA). The illustration in Fig. 9 is the real-time status of irrigation when only sugar beet plots were selected, as shown in menu buttons above the plot display, and thus all barley plots were whitened to indicate no irrigation. The current location of the linear irrigation cart was displayed in the red square along the top edge of the field, and MESA and LEPA plots that are irrigated were colored in dark blue and dark green, respectively. There was about a 1-s time lag in the response of the PLC from the base computer via Bluetooth wireless communication and an additional maximum 3-s delay in nozzle activation due to hydraulic power transition. These time delays were ignored, since the linear cart moved at a maximum of 3 cm/s.

E. Cost of In-Field WSN

There are many choices of WSN that depend on choices of range, data transmission rate, and cost. We explored how we could use off-the-shelf devices with a plug-and-play type of Bluetooth radio module. The total cost of Bluetooth wireless modules used in this paper for the in-field WSN was approximately $1000.

IV. Conclusion

An automated closed-loop irrigation system requires three major components: machine conversion, navigation, and mission planning to support the solid communication protocol. This paper developed the machine conversion from a

conventional irrigation system to an electronically controllable system for individual control of irrigation sprinklers and formulated the navigation of the irrigation system that was continuously monitored by a differential GPS and wirelessly transferred data to a base station for site-specific irrigation control. This paper also provided extensive details for the wireless communication interface of sensors from in-field sensor stations and for a programmable logic controller from a control station to the computer at a base station. Bluetooth wireless technology used in this paper offered a plug-and-play communication module and saved significant time and expense by using commercially available sensors and controllers equipped with serial communication ports. Stable wireless signal connectivity was achieved by power management circuit design and antennas at 1-m above the plant canopies. The development of WISC software provided real-time remote monitoring and control of variable rate irrigation, and continued decision making of mission planning for the automated closed-loop irrigation system. This paper proved a concept of a promising low-cost wireless solution for an in-field WSN and remote control of precision irrigation. Potential applications of Bluetooth wireless technology in agricultural systems can be extended to real-time field monitoring, automated irrigation control, and remote operation of field machinery.

REFERENCES

[1] F. R. Miranda, R. Yoder, and J. B. Wilkerson, "A site-specific irrigation control system," presented at the ASAE Annu. Int. Meeting, Las Vegas, NV, Jul. 27–30, 2003, Paper No. 031129.

[2] C. C. Shock, R. J. David, C. A. Shock, and C. A. Kimberling, "Innovative, automatic, low-cost reading of Watermark soil moisture sensors," in *Proc. Irrig. Assoc. Tech. Conf.*, Falls Church, VA, 1999, pp. 147–152.

[3] R. W. Wall and B. A. King, "Incorporating plug and play technology into measurement and control systems for irrigation management," presented at the ASAE/CSAE Annu. Int. Meeting, Ottawa, ON, Canada, Aug. 1–4, 2004, Paper No. 042189.

[4] C. D. Perry, M. D. Dukes, and K. A. Harrison, "Effects of variable-rate sprinkler cycling on irrigation uniformity," presented at the ASAE/CSAE Annu. Int. Meeting, Ottawa, ON, Canada, Aug. 1–4, 2004, Paper No. 041117.

[5] V. M. Abreu and L. S. Pereira, "Sprinkler irrigation systems design using ISADim," presented at the ASAE Annu. Int. Meeting, Chicago, IL, Jul. 27–31, 2002, Paper No. 022254.

[6] T. Oksanen, M. Ohman, M. Miettinen, and A. Visala, "Open configurable control system for precision farming," in *Proc. ASAE Int. Conf. Autom. Technol. Off-Road Equipment*, Kyoto, Japan, Aug. 1–4, 2004, pp. 184–191.

[7] Z. Zhang, "Investigation of wireless sensor networks for precision agriculture," presented at the ASAE/CSAE Annu. Int. Meeting, Ottawa, ON, Canada, Aug. 1–4, 2004, Paper No. 041154.

[8] W. S. Lee, T. F. Burks, and J. K. Schueller, "Silage yield monitoring system," presented at the ASAE Annu. Int. Meeting, Chicago, IL, Jul. 27–31, 2002, Paper No. 021165.

[9] R. G. Evans and W. M. Iversen, "Combined LEPA and MESA irrigation on a site specific linear move system," presented at the 26th Annu. Irrigation Association Int. Irrigation Show, Phoenix, AZ, Nov. 6–8, 2005, Paper IA05-1298.

[10] A. Irmak, J. W. Jones, W. D. Batchelor, and J. O. Paz, "Linking multiple layers of information for attribution of causes of spatial yield variability in soybean," *Trans. ASAE*, vol. 45, no. 3, pp. 839–849, 2002.

[11] I. S. Ahmad, J. F. Reid, N. Noguchi, and A. C. Hansen, "Nitrogen sensing for precision agriculture using chlorophyll maps," presented at the ASAE Annu. Int. Meeting, Toronto, ON, Canada, Jul. 18–22, 1999, Paper No. 993035.

[12] Y. Kim, R. G. Evans, and J. D. Jabro, "Optimal site-specific configuration for wireless in-field sensor-based irrigation," presented at the 26th Annu. Irrigation Association Int. Irrigation Show, Phoenix, AZ, Nov. 6–8, 2005, Paper IA05-1307.

[13] H. J. Farahani and G. W. Buchleiter, "Temporal stability of soil electrical conductivity in irrigated sandy fields in Colorado," *Trans. ASAE*, vol. 47, no. 1, pp. 79–90, 2004.

[14] P. E. Drummond, C. D. Christy, and E. D. Lund, "Using an automated penetrometer and soil EC probe to characterize the rooting zone," in *Proc. 5th Int. Conf. Precision Agriculture*, Bloomington, MN, Jul. 16–19, 2000.

[15] J. D. Jabro, R. G. Evans, Y. Kim, W. B. Stevens, and W. M. Iversen, "Characterization of spatial variability of soil electrical conductivity and cone index using coulter and penetrometer-type sensors," *Soil Sci.*, vol. 171, no. 8, pp. 627–637, 2006.

[16] R. Kulkarni, *Technologies for Building Wireless Industrial I/O Systems.* Austin, TX: Nat. Instrum., May 3, 2005. [Online]. Available: http://www.ni.com/swf/presentation/us/wireless

[17] T. Morris, *Bluetooth technology living a cable-free lifestyle*, May 3, 2005. [Online]. Available: http://www.ceetusm.com/~dkohn/cet316.html

[18] Bluetooth, *Bluetooth Basics*, May 5, 2006, Bellevue, WA: Bluetooth Special Interest Group. [Online]. Available: http://www.bluetooth.com/Bluetooth/Learn/Basics

[19] G. Pottie, "Wireless sensor networks," in *Proc. IEEE Int. Inf. Theory Workshop*, Killarney, Ireland, Jun. 22–26, 1998, pp. 139–140.

[20] *GPS 16/17 Series Technical Specifications*, Garmin Int., Inc., Olathe, KS, 2002. rev. B.

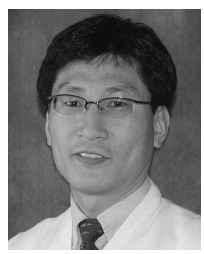

Yunseop (James) Kim (M'03) received the M.S. degree in bioresource engineering from Rutgers University, New Brunswick, NJ, in 1999 and the Ph.D. degree in agricultural engineering from the University of Illinois, Urbana, in 2002. His thesis research focused on the development of a multispectral imaging sensor for plant nitrogen assessment.

In 2002, he joined Deere & Company, where he continued working on plant optical sensing for site-specific crop management. He was also involved in system integration of autonomous navigation to develop unmanned ground vehicles. In 2005, he joined the U.S. Department of Agriculture-Agricultural Research Service, Northern Plains Agricultural Research Laboratory, Sidney, MT, and began an effort to build a wireless sensor-based irrigation system using an integrated wireless sensor network for automated site-specific real-time irrigation scheduling.

Robert G. Evans received the Ph.D. degree from Colorado State University, Fort Collins, in 1981.

He is an Agricultural Engineer and a Research Leader with the U.S. Department of Agriculture-Agricultural Research Service, Northern Plains Agricultural Research Laboratory, Sidney, MT, where he is working on irrigated and dryland cropping systems. He was a faculty member at Washington State University, Pullman, for 20 years before accepting his current position in 2001. He is an internationally recognized authority in water management research. He has made major contributions to the areas of crop-specific water management, plant environmental modifications with irrigation, arid-region irrigation and nutrient management, and site-specific irrigation.

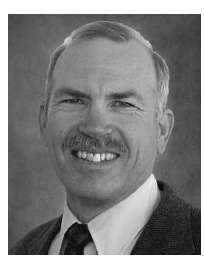

William M. Iversen received the B.T. degree in electronics and the B.S. degree in vocational-technical education from Montana State University-Northern, Havre, in 1975.

In 1976, he received a Northwest College and University Association for Science Application Engineering Appointment in Richland, WA. From 1976 to 1978, he taught electronics at the University of South Dakota, Springfield, before electing to farm full time. He has owned and operated an irrigated and dryland farm since 1978. From 1992 to 2002, he was with the U.S. Department of Agriculture-Agricultural Research Service (ARS), Northern Plains Agricultural Research Laboratory, Sidney, MT, as a Computer Assistant and a Physical Science Technician, integrating remote sensing, GIS, and yield monitors in a precision agriculture program. In 2002, he joined the ARS as a Physical Scientist to assist in the irrigation and sugar beet strip tillage projects.