INTEGRATING AN EMBEDDED SYSTEM IN A MICROWAVE MOISTURE METER

M. A. Lewis, S. Trabelsi

ABSTRACT. *The conversion of a PC- or laptop-controlled microwave moisture meter to a stand-alone meter hosting its own embedded system is discussed. The moisture meter measures the attenuation and phase shift of low power microwaves traversing the sample, from which the dielectric properties are calculated. The power level of the microwaves is similar to that of Wi-Fi. Therefore, the sample is unharmed and no heating occurs. The dielectric properties are then used for rapid, nondestructive determination of the moisture content in the grain or seed sample. The initial system consisted of the moisture meter, controlled via USB interface by an external laptop or PC. Though effective, the system lacked full portability and was susceptible to computer crashes and interruptions in communication between the meter and laptop. To improve the system, a microcontroller was selected in the design of an embedded system for the moisture meter. The microcontroller provides a graphical 144 x 32 pixel LCD and 16-button keypad to facilitate user interaction. The embedded system provides the following functionalities: user interface (input/output), event execution, process control, data acquisition and data storage. Testing showed that the moisture meter with the new embedded system maintained the performance and accuracy observed for the original meter with PC or laptop control. Results are included to show the similarity of measurements taken with the microwave meter (both versions) to measurements taken with a vector network analyzer. The integration of the embedded system with the microwave moisture meter provides a cost-effective, portable, and robust solution for microwave moisture sensing.*

Keywords. *Data acquisition, Dielectric properties, Embedded systems, Microcontroller, Microwave sensing, Moisture content, Voltage level shifter.*

As the world's population continues to increase, so does the demand for foods and other goods produced by the agricultural industry. However, as the demand for production increases, so does the strain of quality and safety assurance. Farming, handling, and processing of grain and seed commodities require rapid and accurate testing methods for characterization. One parameter often tested in agricultural products is moisture content, as it aids decision making for storage, drying, and processing applications. For example, when the quality of peanuts is assessed, the moisture content accounts for 20% of the final grade. Determination of physical properties such as moisture content with high efficiency and accuracy is imperative in the assessment of quality and safety. Standard reference methods require oven-drying at specified temperatures for predetermined lengths of time (*ASAE Standards,* 2002). To determine the moisture content of unshelled peanuts (pod peanuts), 100 g of sample must be dried at 130°C for 6 h. Such methods are time consuming and are destructive to the material, making their use impractical in industrial settings. For this reason, secondary methods have been established and are in development for moisture content determination.

Research has shown that dielectric properties can be successfully used to determine physical properties of cereal grain and oilseed (Nelson, 1973; Nelson et al., 1998; Trabelsi and Nelson, 1998; Trabelsi et al., 1999). Moisture content can be determined from accurate and effective microwave measurements of complex permittivity, ε. The relative complex permittivity, $\varepsilon = \varepsilon' - j\varepsilon''$, influences the wave-matter interaction and can be considered as the electrical signature of a given material (Trabelsi et al., 1999). The dielectric constant ε' and the dielectric loss factor ε'' are indicative of the capability of a material to store electric energy and dissipate electric energy, respectively. A microwave moisture meter was developed within USDA, ARS (Trabelsi et al., 2001; Trabelsi and Nelson, 2003b; Trabelsi et al., 2008a; Trabelsi et al., 2008b; Trabelsi et al., 2010). The moisture meter is based on the free-space transmission measurement technique (Trabelsi and Nelson, 2003a) and uses low-power microwaves for rapid and nondestructive determination of moisture content in grain or seed samples. Microwave power levels used are ≤ 32 mW, which is comparable to Wi-Fi power levels; therefore, the sample is unharmed and no microwave heating occurs.

Submitted for review in March 2012 as manuscript number IET 9666; approved for publication by the Information & Electrical Technologies Division of ASABE in September 2012. Presented at the 2011 ASABE Annual Meeting as Paper No. 1110943.

Mention of company or trade names is for purpose of description only and does not imply endorsement by the U. S. Department of Agriculture.

The authors are **Micah A. Lewis,** Research Agricultural Engineer (Postdoc), and **Samir Trabelsi, ASABE Member,** Electronics Engineer, U.S. Department of Agriculture, Agricultural Research Service, Richard B. Russell Agricultural Research Center, Athens, Georgia. **Corresponding author:** Micah A. Lewis, U. S. Department of Agriculture, Agricultural Research Service, Richard B. Russell Agricultural Research Center, Athens, GA 30604-5677; phone: 706-546-3093; e-mail: micah.lewis@ars.usda.gov.

The measurement process begins with the measurement of two voltages (representative of the signal received by the receiving antenna) from electronic circuits while an empty sample holder is placed between two antennas; these voltages are referred to as the reference voltages. After the sample holder has been filled with the material of interest, it is replaced between the antennas, and the two voltages are measured again. Using the two sets of voltages, the attenuation and phase shift caused by the material are determined, and from these values the dielectric properties are calculated (Nelson, 1999). By using the dielectric properties of the material, moisture content is determined with appropriate calibration functions (Trabelsi et al., 1998; Trabelsi and Nelson, 1998; Trabelsi and Nelson, 2004).

The initial version of the microwave moisture meter developed for peanuts is shown in figure 1. Figure 2 shows the power connection and the USB connection to the controlling laptop or PC. Original software was developed in Visual Basic to provide a graphical user interface (GUI) to facilitate the measurement process. The voltages were measured with a Measurement Computing USB-1608FS 16-bit data acquisition module. Its libraries were embedded into original software to control data acquisition.

Throughout extensive testing in the laboratory and during deployment at peanut buying points, the moisture meter has proven to be robust in accuracy and repeatability. However, its major vulnerability lies within the controlling laptop. In the past, laptop crashes or interrupts in communication with the laptop have rendered the moisture meter unusable. Such events, as well as the lack of full portability, made it desirable to develop a portable, stand-alone system, nonsusceptible to breaches in operation due to failure of an external controller. Therefore, an embedded solution was sought to integrate with the microwave moisture meter.

A SensorCore (SC) microcontroller, manufactured by Tern, Inc.(Davis, Calif.), was selected and programmed to control the measurement process and data acquisition. This controller was used in the development of an embedded system providing user interface (input/output), event execution, process control, and data acquisition and storage. The methodology for implementing the stand-alone system and the comparative results are discussed.

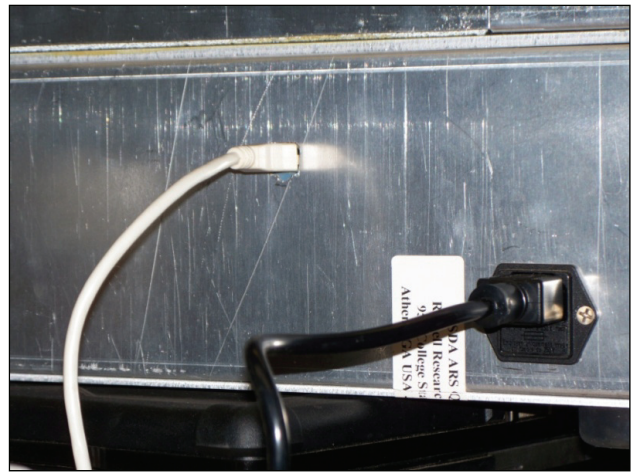

Figure 2. USB connection on rear panel of moisture meter.

Materials and Methods

Microcontroller Selection

In many of today's electronic devices, microcontrollers are at the helm of operation and functionality. Household appliances such as microwave ovens and washing machines have at least one microcontroller embedded. Such appliances usually have one main function and do it repetitively. Microcontrollers are also used in research and engineering applications to aid in control and data acquisition (Siyami et al., 1987; Li et al., 2006). They usually receive some type of user input and are programmed to perform one task repeatedly and accurately (Heath, 2003). Therefore, the hardware and software

Figure 1. Initial version of microwave moisture meter (controlled by external laptop).

involved are usually robust and simplified as much as possible to reduce the number of working parts and complexity.

The most critical step in the design of the embedded system was the selection of the appropriate microcontroller. A suitable microcontroller was needed to integrate within the existing microwave moisture meter; one that would provide at least the same performance as the initial system and provide room for future expansion. As several microcontrollers were evaluated, the following criteria were taken into consideration: analog-to-digital converter (ADC) resolution, static random-access memory (SRAM) size, cost, feasibility of interface with LCD and keypad, availability of ports for added sensors, and provisions for data storage.

The ADC resolution is the most important attribute. Many potential microcontrollers were quickly eliminated because ADC resolution was less than 16-bit. During the selection process, it was also discovered that there were minimal options in which a microcontroller had an ADC that read bipolar voltage ranges. Therefore, a voltage level shifter circuit was considered. After microcontrollers with qualifying ADC resolution were identified, they were screened out by cost and interface possibilities with LCD and keypad. Upon the conclusion of the selection process, the SensorCore (SC) microcontroller was chosen. Its main attributes include reasonable cost, a 16-channel, 24-bit Sigma Delta ADC, 512-MB RAM, 512-MB electrically erasable programmable read-only memory (EEPROM), data storage up to 2 GB via CompactFlash interface, compact size (2.0 × 4.5 in.), and 16-button keypad with graphical LCD. The microcontroller is easy to program, and it provides room for software expansion and additional inputs. Figure 3 shows an illustration of the microcontroller with keypad and LCD.

The original keypad configuration consisted of alphanumeric buttons, 0-9 and A-F. However, modifications were made to make the following options available: backspace (←), decimal (.) and enter (↵).

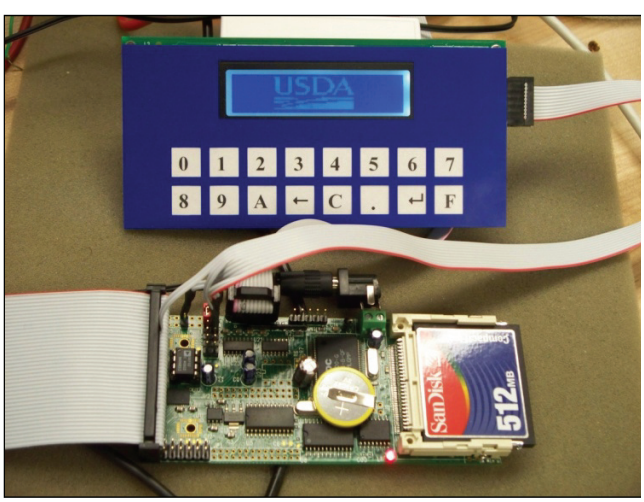

Figure 3. SensorCore (Tern, Inc.) microcontroller shown with 16-button keypad and graphical LCD.

Data Acquisition

Although the resulting output is moisture content of the measured sample, the essence of the microwave moisture meter lies within the measurement of attenuation and phase shift, which are used to calculate the dielectric properties. The accuracy with which the voltages representing attenuation and phase shift are measured determines the accuracy of the moisture content prediction. In the initial system, the data acquisition system provided 16-bit resolution, 100-MΩ input impedance, and capability of reading voltages in a bipolar range. Measurements with that system have shown that, depending on the moisture content and/or temperature of the sample, voltages can be measured as small as 0.1 mV. This is why high-order resolution was needed. Table 1 shows the achievable resolution at specified bit configurations. A minimum of 16-bit resolution is needed to provide a voltage resolution that is less than 0.1 mV. It was also observed from measurements with the initial system that the output voltages from the moisture meter were within a range from -1 V to +1 V, which emphasizes the need for distinguishing bipolar voltages.

The SC microcontroller was configured with a Linear Technology® 24-bit sigma delta ADC (Cumming, Ga.). The sigma-delta architecture provides the ability to adjust the resolution of the ADC by changing the sampling rate. The reference voltage is configured so that the ADC reads voltages in a range from 0 to 2.5 V. The range of voltages the ADC reads is unipolar; however, the range of voltages that is provided by the moisture meter is bipolar. Level shifter circuitry was implemented to shift the voltages output by the moisture meter from a bipolar range to a unipolar range.

The output voltages from the moisture meter serve as input to the ADC of the microcontroller. From previous measurements, an input range of ±1 V was defined. Therefore, a level shifter circuit was implemented to add 1 V to the voltages output by the moisture meter and account for this shift later within the software. This changed the ±1-V bipolar input range to a unipolar range of 0 to 2 V. The level shifter was implemented by designing a summing amplifier that would add 1 V to the incoming signal. The equation for the summing amplifier is:

$$V_{out} = -R_F\left(\frac{V1}{R1} + \frac{V2}{R2}\right) \tag{1}$$

where V1 is the voltage output from the moisture meter, V2 is the added voltage of 1 V, R1 and R2 are the resistors to which the corresponding voltages were applied, R_F is the feedback resistor for the signal feedback to the negative

Table 1. Resolution for various standard bit configurations over a 0 to 2.5 V range.

	No. of Digital Values	Digital Range	Voltage Resolution, V (for range 0-2.5 V)
8-bit	256	0-255	0.009766
10-bit	1024	0-1023	0.002441
12-bit	4096	0-4095	0.0006104
16-bit	65536	0-65535	0.00003815
24-bit (variable sample rate)	8388608	0-8388607	0.0000002980

input of the operational amplifier (op-amp), and V_{out} is the voltage measured from the output of the summing amplifier. In this application, the initial voltage range is only being shifted up by +1 V. Therefore, the gain value is equal to one, and all the resistor values are equal. Thus, equation 1 reduces to:

$$V_{out} = -(V1 + V2) \tag{2}$$

In the implementation of the circuit, 100-kΩ resistors were used to provide valid input impedance. Through simulation and testing, an OP07 ultralow offset voltage op-amp was used in the circuit because of its provision of minimal offset. In the completion of the circuit, an inverting amplifier was added to the output of the summing amplifier to invert the voltages to the proper signs for correspondence. Table 2 shows the values as measured at the output of both amplifiers within the circuit. The voltages in the table show that it is only at the output of the inverting amplifier that the proper voltage shift is achieved.

Figures 4 and 5 show a schematic diagram of the simulated circuit and an illustration of the implemented circuit, respectively. In figure 4, V1 represents one of the output voltages from the moisture meter, and V2 represents the added 1 V. The summing amplifier is represented as U1, and voltages V1 and V2 serve as input to U1. The output of the summing amplifier (U1) is used as input to the inverting amplifier, U2. The output from U2 is the voltage that is read by the ADC.

The level-shifter circuit was tested in the laboratory with an Agilent E3631A triple output DC power supply (Santa Clara, Calif.). It was used to supply the added 1 V that provides the shift, and it was used to provide the 15V and -15 V supply voltages to the op-amps. The power supply in the microwave moisture meter is an HK15A-15/A single output 115 VAC input industrial switch-mode power supply manufactured by TDK-Lambda (San Diego, Calif.). It has an output of 15 V and was chosen because of its stability, compact size and low price to power the microwave circuits in the moisture meter. Integrating the level-shifter circuit with a single output power supply required a few hardware innovations to account for the 1 V needed and the negative supply voltage. The original 15 V output of the power supply was used to provide the positive supply voltage to the op-amps.

Table 2. Voltage values measured throughout the level shifter.

After Summing Amp			After Inverting Amp		
V_1	V_2	V_{out}	V_1	V_2	V_{out}
-1	1	0	-1	1	0
0	1	-1	0	1	1
1	1	-2	1	1	2

Utilizing the stability of the power supply, a voltage divider was used to generate 1 V from the 15 V output. Voltage dividers are simple circuits used to produce an output voltage, V_{out}, which is a fraction of its input voltage, V_{in}. The equation for the voltage divider is expressed as:

$$V_{out} = \frac{R_2}{R_1 + R_2} \times V_{in} \tag{3}$$

where V_{in} is the voltage supplied to the divider, R_1 and R_2 are resistor values, and V_{out} is the resulting voltage. In this instance, R_1 was equal to 17.2 kΩ which consisted of a 15-kΩ resistor and 2.2-kΩ resistor connected in series; R_2 was 1239.2 Ω which consisted of resistors of 1.5, 2.2, 22 Ω and 1.2 kΩ values connected in series. Theoretically, these values, with a V_{in} of 15 V, would yield a V_{out} value of 1.008 V. However, since actual resistance values for the resistors were not exactly as specified, the measured V_{out}

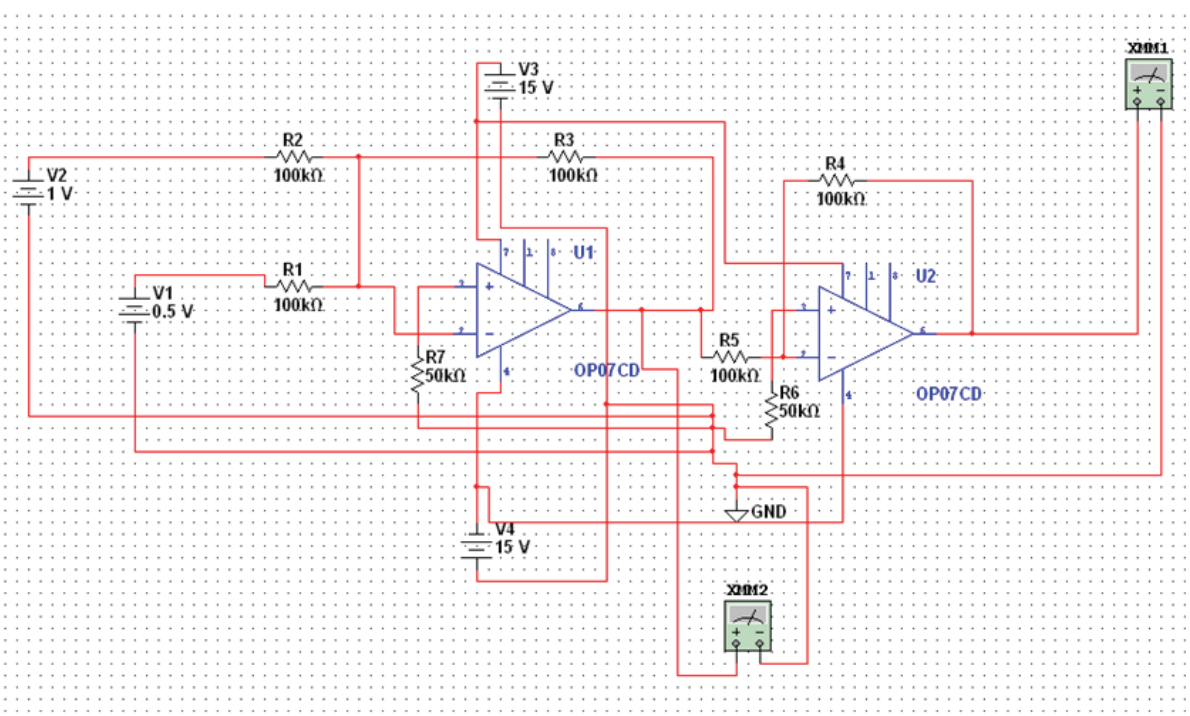

Figure 4. Schematic diagram of level-shifter circuit simulated in Multisim.

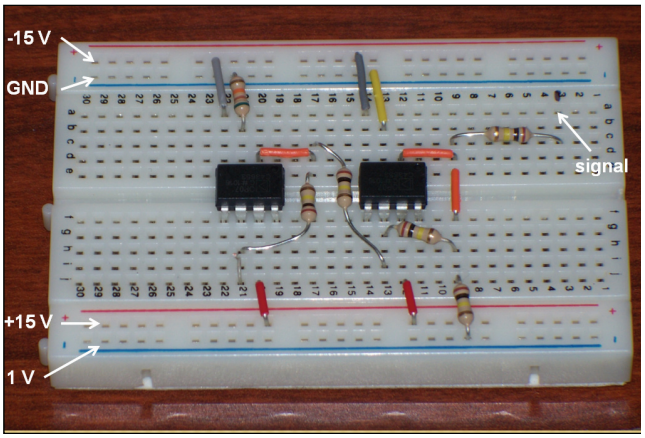

Figure 5. Implementation of level-shifter circuit.

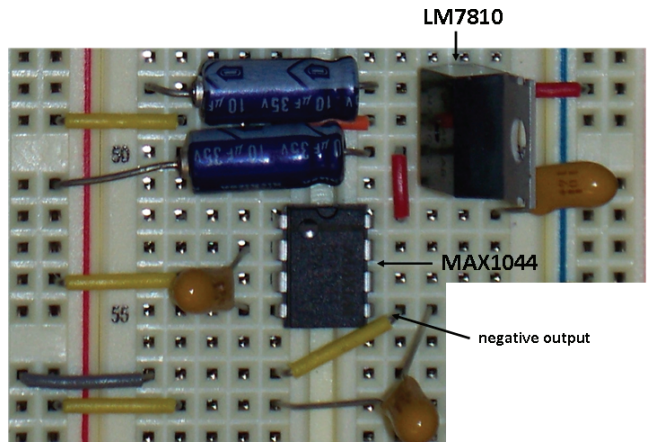

Figure 7. Circuitry solution for negative supply voltage.

value was 0.994 V. Figure 6 shows the implementation of the voltage divider. The 1-V output from the voltage divider was applied to a strip on the breadboard that supplies the appropriate pins of the op-amps used in the level shifter. A capacitor was connected between R_2 and ground to filter out any high-frequency signals produced by the switch-mode power supply.

Next, a hardware solution was sought to account for the negative supply voltage needed for each op-amp. In ideal cases, the positive and negative supply voltages are symmetric. However, unless the full negative voltage swing is needed, stability can be maintained with a higher negative supply voltage, > -15 V for this application. To test for the maximum negative supply voltage needed to maintain stability, -15 V was applied to the op-amp and was increased until the output of the op-amp was observed to deteriorate. Voltages were measured with an Agilent 34401A 6 ½ digit multimeter. Results showed that a maximum of -3.9 V was needed at the negative supply to maintain stability. A MAX1044 switched-capacitor voltage converter was used to generate the negative supply voltage required by the op-amps. It required a 10-V input; therefore, an LM7810 3-terminal positive voltage regulator was used to supply the 10 V. The LM7810 was able to use the 15 V already available as input. Figure 7 shows the MAX1044 and LM7810 as implemented on the breadboard. The measured output from the MAX1044 was -8.03 V. Figure 8 shows the entire circuit responsible for conditioning the signals output from the microwave moisture meter (level shifter, voltage divider, and components for negative supply voltage). Capacitors throughout the circuit were added for decoupling, buffering and filtering purposes. The microwave moisture meter, complete with installed microcontroller, LCD display, and keypad, is shown in figure 9.

Software Generation

Software for the initial version of the microwave meter was written in Visual Basic. The user was able to proceed with the measurement process through interaction with the GUI. The software to control the embedded system and guide the measurement process was written in C programming language and was created in the Paradigm Integrated Development Environment which was provided with the microcontroller. User interaction is now established via LCD and keypad. The software was created to be event-driven and user friendly. The code was developed in a modular format and was divided into five classes: bitmap, port_sens, data_acquisition, calculations, and filesys16. The classes are listed in order of execution.

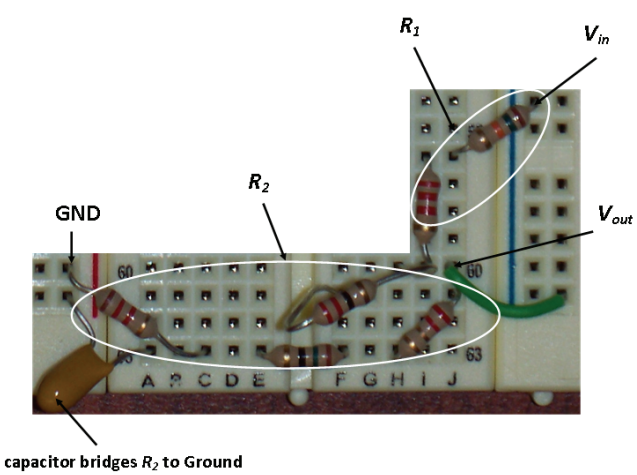

Figure 6. Voltage divider implemented for level-shifter circuit.

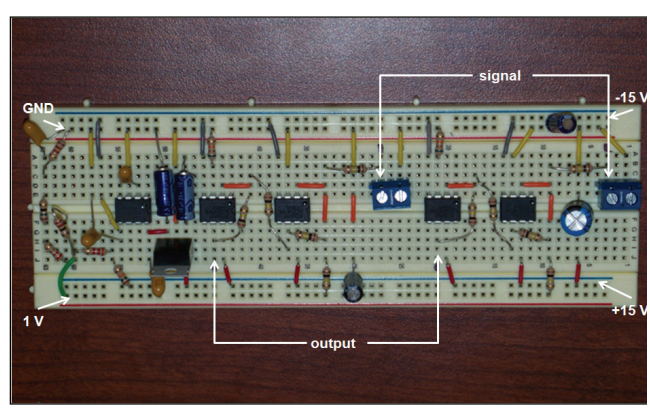

Figure 8. Complete circuit for signal conditioning.

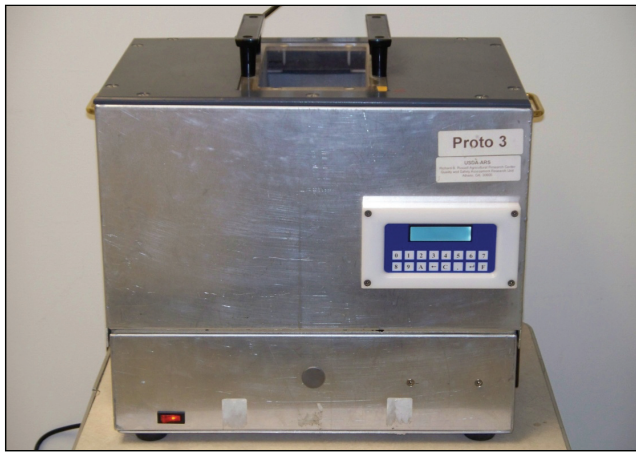

Figure 9. Microwave moisture meter shown with LCD and keypad (embedded system).

The bitmap class controls the scrolling bitmap images that display when the moisture meter is turned on initially or reset. The port_sens class governs the measurement process and serves as the main class for the software. Upon its execution, steps are given plainly such that the measurement process can be followed by nonskilled workers. It is also during this time that information regarding the sample is entered, and the sample is inserted into the meter. The data_acquisition class handles the reading of the voltages and conversion from analog to digital to float values that can be manipulated later in calculations. The calculations class uses the voltages to calculate the dielectric properties of the sample. Coded algorithms are then used to determine the moisture content from the dielectric properties (Trabelsi and Nelson, 1998). Once the calculation of the moisture content of the material is completed, the moisture content is displayed on the LCD. The filesys16 class utilizes the FAT16-compatible file system to access an installed CompactFlash card for data storage. Data are either stored in a new file or appended to data in an existing file. The flowchart in figure 10 illustrates the main flow of the program.

Each step in the measurement procedure for the moisture meter is shown on the LCD, and user interaction is required before it advances to the next step. Instructions and help documentation are also available to aid users. During the development of the software, it was tested by users of various skill sets to aid in the creation of a user-friendly measurement experience.

Experimental Design

The underlying goal throughout the implementation of the embedded system was to at the very least maintain the performance observed in the initial system in which the microwave moisture meter was controlled by an external laptop. Low-cost and practical components were chosen to make this goal achievable. Five-percent-tolerance resistors were used because of their availability and the provision of a foundation with which to assess performance. System behavior was stable with these resistors. The OP07 op-amps were used instead of the common LM741 op-amps because of their minimal offset.

Once the embedded system was completed, measurements were conducted with unshelled Georgia Runner type peanuts to compare the performance of the embedded system with that of the laptop-controlled system. Ten replications were taken on both systems within a 17-min period. For each replication, the same sample was measured with each system with no changes in the presentation of the sample. An identical separate sample holder was used for the reference measurement requiring an empty sample holder. This experiment was performed to assess the stability of measurements with the embedded system.

To further evaluate the performance of the embedded system, more measurements were taken with it, and they were compared to measurements taken in free space with a Hewlett-Packard 8510C vector network analyzer (VNA) and a pair of horn-lens antennas (Trabelsi and Nelson,

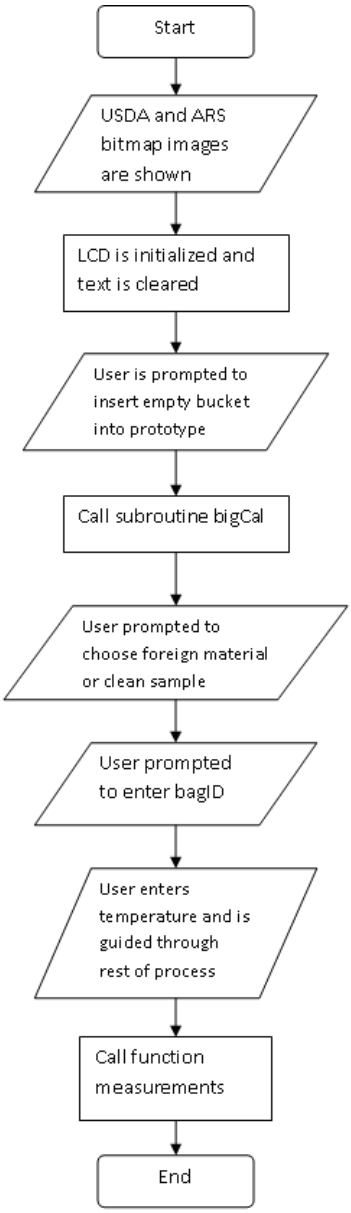

Figure 10. Flowchart for main program execution.

2003a). Previous research has shown that the response and performance of the microwave moisture meter compares well to that of the VNA (Trabelsi and Nelson, 2007; Trabelsi et al., 2008a).

RESULTS AND DISCUSSION

The results from the 10 replications of one sample taken with both systems are shown in table 3. The data in the table for the embedded system compare well with those of the laptop-controlled system. As mentioned earlier, the accuracy of moisture content determination depends on the accuracy with which the dielectric properties are determined. Therefore, in table 3 the raw data are shown from measurements.

The standard deviations observed in the attenuation and phase shift from measurements taken with the laptop-controlled system were 0.018886 and 0.996685, respectively. The standard deviations observed in the attenuation and phase shift from measurements taken with the embedded system were 0.011785 and 0.588683, respectively. Therefore, these results confirm that the performance of the microwave moisture meter was maintained in the conversion to the embedded system.

Figures 11 and 12 show variation of the dielectric properties, each divided by density, with moisture content as determined by the oven drying method. Figure 11 shows a comparison between the laptop-controlled system and the VNA from measurements on Georgia Runner type unshelled peanuts from the 2007 harvest season. Each sample was measured at three different densities. Figure 12 shows a comparison between the embedded system and the VNA from measurements on Runner type unshelled peanuts from the 2010 harvest season. Each sample was measured at two different densities.

One-way analyses of variance (ANOVA) were performed to analyze the data for any significant differences between measurements taken with the microwave moisture sensor (laptop controlled or embedded system) and the VNA. In each case, the two measurement systems being compared were considered as two treatments. As shown in figure 11, three replicates of measurements for dielectric properties with both systems were taken when the microwave sensor was laptop controlled. As shown in figure 12, two replicates of measurements were taken when the microwave sensor was controlled by the embedded system. The null hypothesis assumes there is no significant difference between the two treatments in each case. Observing the ANOVA results in table 4, we accept the null hypothesis at the 1% level because all p-values in the table are much greater than 0.01. We can conclude that measurable differences between the measurement systems are minimal because the p-values are so high.

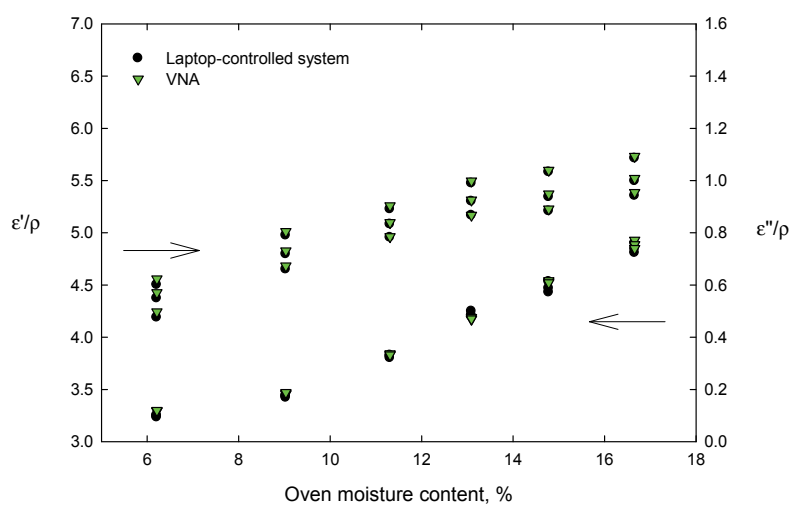

Figure 11. Variation of dielectric properties with moisture content shown using laptop-controlled system and VNA.

Table 3. Results from measurements taken on unshelled Georgia Runner type peanuts comparing the embedded system to the laptop-controlled system.

Laptop-Controlled System				Embedded System			
Attn (dB)	Phase (°)	ε'	ε"	Attn (dB)	Phase (°)	ε'	ε"
2.47	131.799	1.615	0.049	2.60	132.261	1.614	0.052
2.48	131.790	1.615	0.049	2.60	131.786	1.615	0.052
2.44	131.210	1.617	0.049	2.61	131.880	1.615	0.052
2.43	130.976	1.617	0.048	2.60	131.506	1.616	0.052
2.46	130.978	1.617	0.049	2.63	131.512	1.616	0.052
2.43	130.527	1.619	0.048	2.60	131.007	1.617	0.052
2.45	133.647	1.609	0.049	2.60	130.940	1.618	0.052
2.44	132.983	1.611	0.049	2.62	130.906	1.618	0.052
2.45	132.623	1.613	0.049	2.59	130.505	1.619	0.052
2.48	132.233	1.614	0.049	2.60	130.569	1.619	0.052

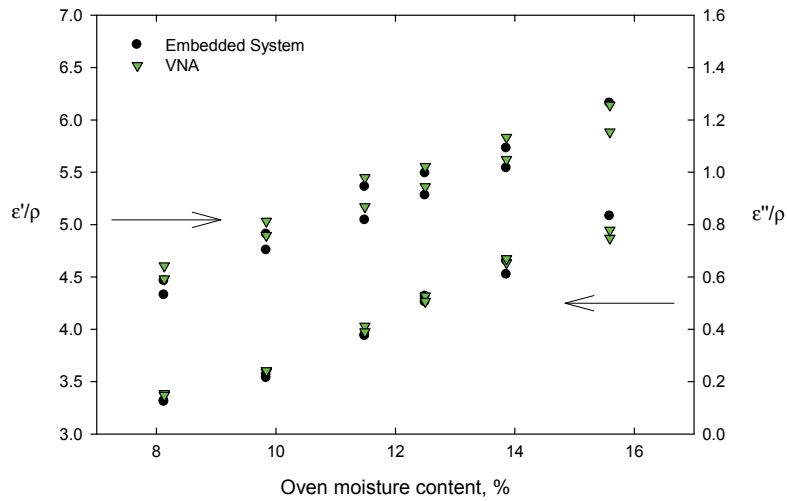

Figure 12. Variation of dielectric properties with moisture content shown using embedded system and VNA.

Table 4. One-way analysis of variance results for system comparison.

	P-values	
Parameter	VNA vs. Embedded System	VNA vs. Laptop-controlled System
Dielectric constant	0.8891	0.8434
Dielectric loss factor	0.9232	0.8926

The data from the graphs show that in both cases, even with data taken from measurements on peanut crops three years apart, the microwave moisture meter's performance is comparable to that of the VNA. Data values obtained from measurements with the moisture meter, whether laptop-controlled or stand-alone, are virtually superimposed on those obtained from measurements with the VNA. The statistical analysis shows no significant differences between the measurement systems. These results confirm that integration of the embedded system caused no deterioration in performance of the microwave moisture meter.

Conclusion

A microcontroller was used in the implementation of an embedded system, resulting in the development of a stand-alone version of the initial laptop-controlled microwave moisture meter. All phases of development were approached systematically, and all desired levels of functionality in the system were achieved. Software was tested to ensure that the measurement process was user friendly. Standard deviation values for attenuation and phase shift from measurements taken with the embedded system (0.011785 and 0.588683) were less than those observed from measurements with the laptop controlled system (0.018885 and 0.996685). Analysis of variance (ANOVA) results show no significant differences between performances of the microwave moisture meter and a laboratory vector network analyzer (VNA) at the 1% probability level. Resulting p-values were high, confirming minimal differences between systems. Performance compared well with that of the VNA. Therefore, the performance and stability of the system were maintained.

The implementation of the embedded system enhances the reliability of the moisture meter and eliminates the need for external control from a peripheral instrument, increasing the portability. Implementing the embedded system also reduces the cost of the moisture meter, making it more attractive for widespread use.

Acknowledgements

The authors would like to thank Professor Takoi Hamrita, Department of Biological and Agricultural Engineering, The University of Georgia, Athens, GA, for guidance in microcontroller selection and insight towards a systematic and methodical approach to design, development and integration of the embedded solution. The authors would also like to thank Professor Mark Haidekker, Department of Biological and Agricultural Engineering, The University of Georgia, for guidance in signal conditioning and circuit completion.

References

ASAE Standards. 49th ed. 2002. S410.1: Moisture measurement - peanuts. St. Joseph, Mich: ASAE.

Heath, S. 2003. *Embedded Systems Design*. United Kingdom: Newnes.

Li, Z., N. Wang, G. S. V. Raghavan, and W. Cheng. 2006. A microcontroller-based, feedback power control system for microwave drying processes. *Applied Eng. in Agric.* 22(2): 309-314.

Nelson, S. O. 1973. Electrical properties of agricultural products: A critical review. *Trans. ASAE* 16(2): 384-400.

Nelson, S. O. 1999. Dielectric properties measurement techniques and applications. *Trans. ASAE* 42(2): 523-529.

Nelson, S. O., S. Trabelsi, and A. W. Kraszewski. 1998. Advances in sensing grain moisture content by microwave measurements. *Trans. ASAE* 41(2): 483-487.

Siyami, S., B. R. Tennes, H. R. Zapp, G. K. Brown, B. A. Klug, and J. R. Clemens. 1987. Microcontroller-based data acquisition system for impact measurement. *Trans. ASAE* 30(6): 1822-1826.

Trabelsi, S., A. W. Kraszewski, and S. O. Nelson. 1998. New density-independent calibration function for microwave sensing of moisture content in particulate materials. *IEEE Trans. on Instrumentation and Measurement* 47(3): 613-622.

Trabelsi, S., A. W. Kraszewski, and S. O. Nelson. 1999. Determining physical properties of grain by microwave permittivity measurements. *Trans. ASAE* 42(2): 531-536.

Trabelsi, S., A. W. Kraszewski, and S. O. Nelson. 2001. New calibration technique for microwave moisture sensors. *IEEE Trans. on Instrumentation and Measurement* 50: 877-881.

Trabelsi, S., M. A. Lewis, and S. O. Nelson. 2010. Microwave moisture meter for rapid and nondestructive grading of peanuts. ASABE Paper No. 1009183. St. Joseph, Mich.: ASABE.

Trabelsi, S., and S. O. Nelson. 1998. Density-independent functions for on-line microwave moisture meters: A general discussion. *Measurement Sci. and Tech.* 9(4): 570-578.

Trabelsi, S., and S. O. Nelson. 2003a. Free-space measurement of dielectric properties of cereal grain and oilseed at microwave frequencies. *Measurement Sci. and Tech.* 14(5): 589-600.

Trabelsi, S., and S. O. Nelson. 2003b. Nondestructive multiparameter microwave sensor. ASAE Paper No. 036129. St. Joseph, Mich.: ASAE.

Trabelsi, S., and S. O. Nelson. 2004. Calibration methods for nondestructive microwave sensing of moisture content and bulk density of granular materials. *Trans. ASAE* 47(6): 1999-2008.

Trabelsi, S., and S. O. Nelson. 2007. A low-cost microwave sensor for simultaneous and independent determination of bulk density and moisture content in grain and seed. ASAE Paper No. 076240. St. Joseph, Mich.: ASAE.

Trabelsi, S., S. O. Nelson, and M. Lewis. 2008a. Microwave moisture sensor for grain and seed. *Biol. Eng.* 1(2): 195-202.

Trabelsi, S., S. O. Nelson, and M. Lewis. 2008b. Practical microwave meter for sensing moisture and density of granular materials. *Instrumentation and Measurement Technology Conf. Proc., 2008. IMTC 2008. IEEE*. 1021-1025.