US006692970B2

(12) **United States Patent**
Butnor et al.

(10) **Patent No.: US 6,692,970 B2**
(45) **Date of Patent: Feb. 17, 2004**

(54) **AUTOMATED CARBON EFFLUX SYSTEM**

(75) Inventors: **John R. Butnor**, Durham, NC (US); **Christopher A. Maier**, Hurdle Mills, NC (US); **Kurt H. Johnsen**, Durham, NC (US)

(73) Assignee: **The United States of America as represented by the Secretary of Agriculture**, Washington, DC (US)

(*) Notice: Subject to any disclaimer, the term of this patent is extended or adjusted under 35 U.S.C. 154(b) by 200 days.

(21) Appl. No.: **09/755,361**

(22) Filed: **Jan. 5, 2001**

(65) **Prior Publication Data**

US 2002/0000226 A1 Jan. 3, 2002

Related U.S. Application Data

(60) Provisional application No. 60/177,340, filed on Jan. 19, 2000.

(51) **Int. Cl.**[7] **G01N 7/00**; G01N 33/24; G01N 33/00

(52) **U.S. Cl.** **436/148**; 436/32; 436/127; 436/133; 422/82.13; 422/83

(58) **Field of Search** 422/82.13, 83; 436/148, 25, 139, 141, 133, 32, 127; 73/19.05, 23.2, 864.81, 864.83; 166/250, 254

(56) **References Cited**

U.S. PATENT DOCUMENTS

4,816,412 A	3/1989	Schmidt et al.	.....	436/33
5,271,900 A	12/1993	Morita	.....	422/80
5,332,901 A	7/1994	Eckles et al.	.....	250/345
5,340,987 A	8/1994	Eckles et al.	.....	250/345
5,355,739 A	10/1994	Cooper et al.	.....	73/864
5,457,320 A	10/1995	Eckles et al.	.....	250/345
5,887,547 A	3/1999	Caveny et al.	.....	119/174
5,975,020 A	11/1999	Caveny et al.	.....	119/174

OTHER PUBLICATIONS

Eklund, "Practical Guidance for Flux Chamber Measurements of Fugitive Volatile Organic Emission Rates", J. Air Waste Manage. Assoc., 1992, v. 42, pp. 1583–1591.*

* cited by examiner

Primary Examiner—Jill Warden
Assistant Examiner—Yelena Gakh
(74) *Attorney, Agent, or Firm*—John D. Fado; Janet I. Stockhausen

(57) **ABSTRACT**

A method and apparatus are provided for measuring the gas efflux from a substrate. In particular, one or more measuring chambers receive a gas enriched air from the substrate. A respiration system sends reference air having a known gas concentration to the measuring chamber. The reference air mixes with the gas enriched air to form a mixed air, which is returned to the respiration system. The respiration system then measures the gas efflux of the substrate over the given amount of time.

18 Claims, 2 Drawing Sheets

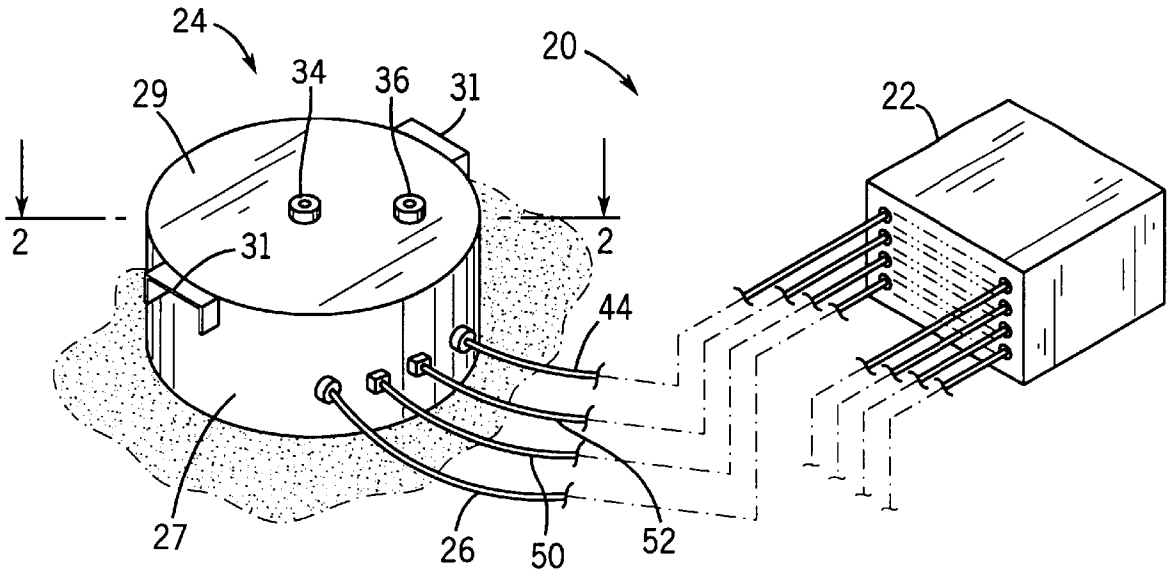

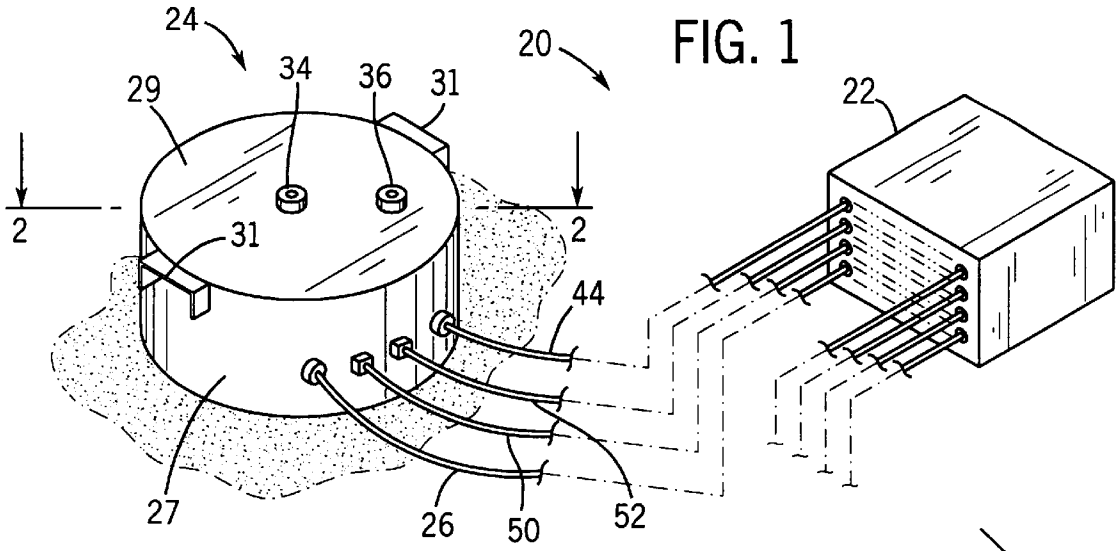

FIG. 1

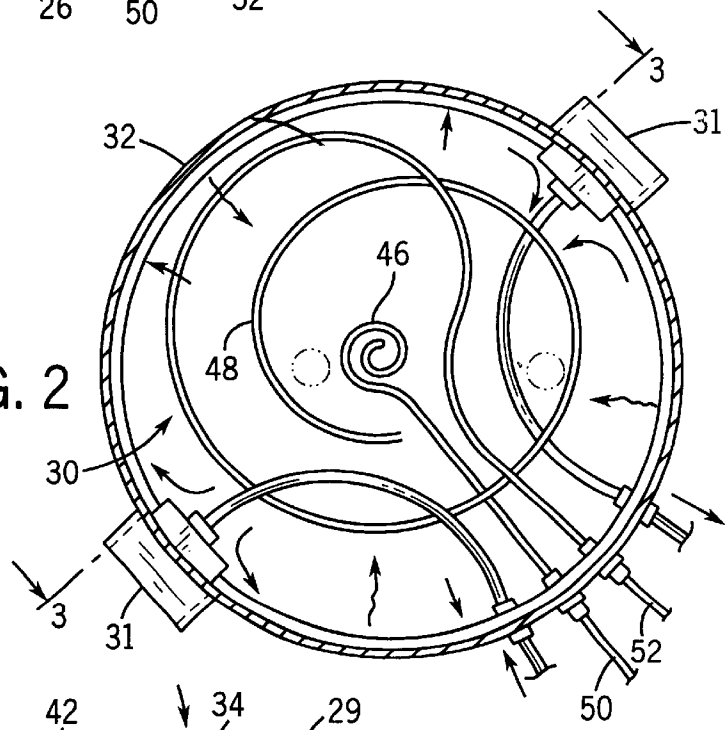

FIG. 2

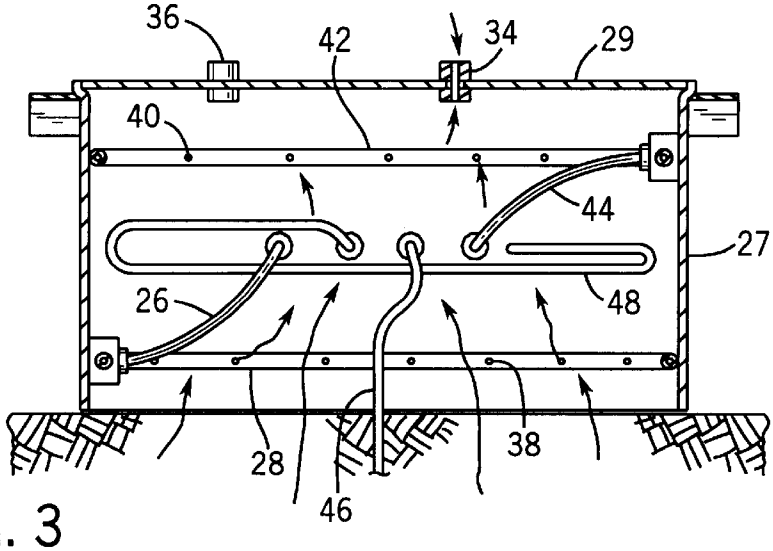

FIG. 3

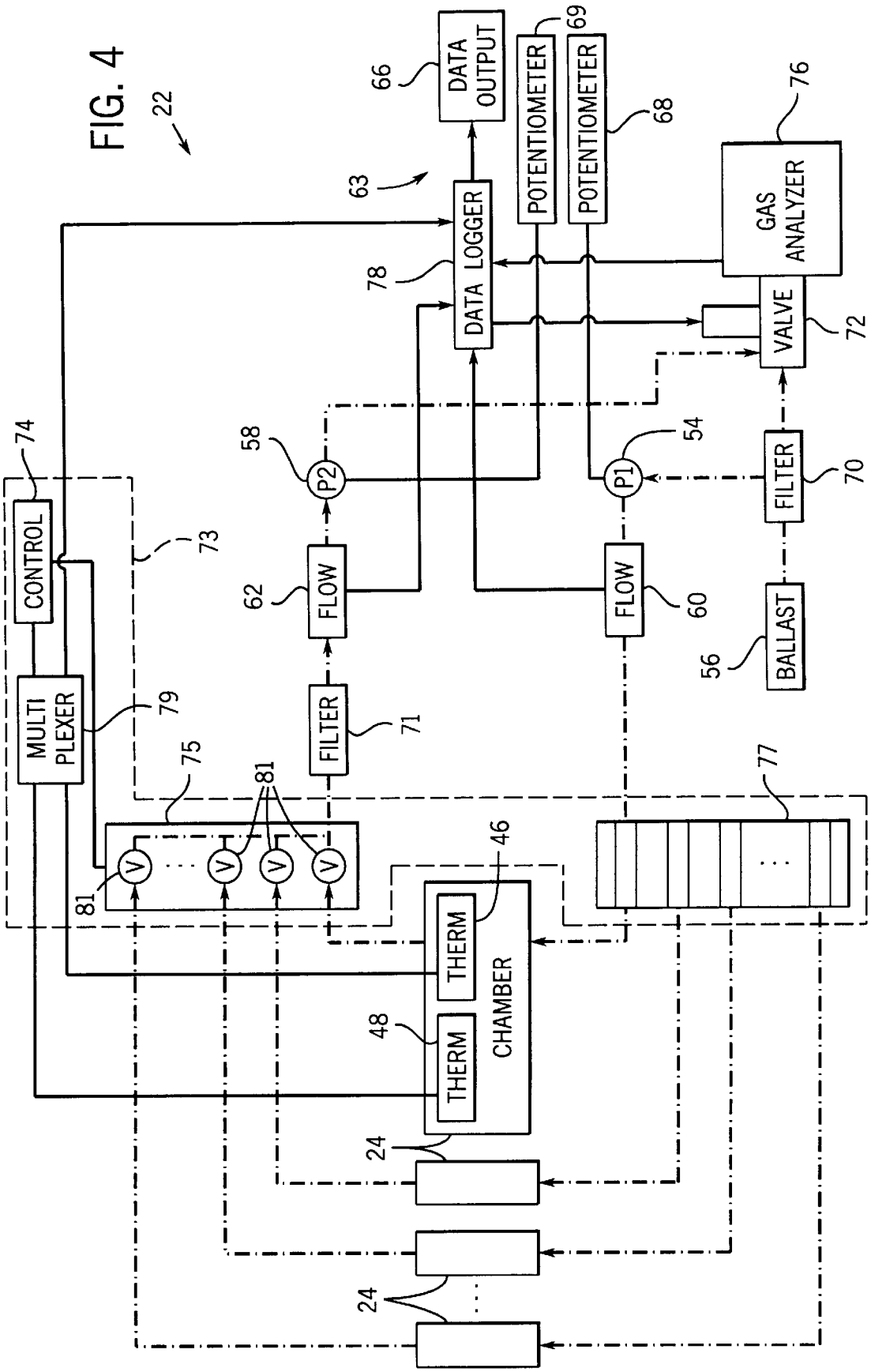
FIG. 4
22
63
66
DATA OUTPUT
69
POTENTIOMETER
68
POTENTIOMETER
76
GAS ANALYZER
78
DATA LOGGER
72
VALVE
74
CONTROL
58
P2
54
P1
70
FILTER
73
62
FLOW
60
FLOW
56
BALLAST
MULTI PLEXER
79
71
FILTER
75
81
77
46
THERM
48
THERM
CHAMBER
24
24

AUTOMATED CARBON EFFLUX SYSTEM

CROSS-REFERENCE TO RELATED APPLICATIONS

This application is based on provisional application No. 60/177,340 filed Jan. 19, 2000, and claims the benefit thereof. Ser. No. 60/177,340 is incorporated by reference herein.

STATEMENT REGARDING FEDERALLY SPONSORED RESEARCH OR DEVELOPMENT

BACKGROUND OF THE INVENTION

Terrestrial ecosystems serve as significant sources and sinks for various gases, such as carbon dioxide (CO_2). In natural forest ecosystems, CO_2 is generally absorbed through the forest canopy as photosynthesis occurs and emitted back into the atmosphere through the respiration of living organisms, with as much as 50% or more being emitted by decay bacteria and fungi as they decompose tissues in the forest soil. Tree roots, living woody tissue as well as night-time respiration of foliage also contribute to the efflux of CO_2 from forest systems. As the forest matures and its canopy grows, the level of carbon influx may exceed the level of carbon efflux. Forests typically move from being sources of atmospheric carbon after a disturbance that removes the canopy, i.e. forest operations or fire, to a sink of carbon at some later stage of maturity. We are now in an age where carbon pool management is being politicized and legislated while the role soil respiration (combination of respiration of soil microbes and living roots) plays in carbon budgets continues to be refined. This is of particular interest in both agricultural systems and managed forest ecosystems, where management/cultural decisions may have a substantial impact on the net carbon balance. Cultural practices, site preparation, nutritional amendments and genetic improvement all have the potential to influence net ecosystem productivity and affect carbon sequestration.

The measurement of soil, woody debris, root and stem respiration is essential to understanding the loss of carbon in the ecosystem. Early sampling techniques measured carbon loss using closed, static chambers placed on the soil surface and the rate of CO_2 accumulation was assessed by measuring the amount of CO_2 captured in an alkali trap (KOH, NaOH, or Soda Lime) over a fixed period of time. Other alternative static methods require the periodic drawing of samples from the soil so as to measure its carbon concentration with gas chromatography and compute its carbon flux rate over the collection period.

These static methods, however, suffer from several drawbacks. For instance, they are exceptionally burdensome to technicians taking diurnal carbon efflux measures, who are required to manually perform each measurement individually, in single chambers. Additionally, the accumulation of high concentrations of CO_2 in the collection chambers results in a greater storage of CO_2 in the soil, which changes the soil's CO_2 diffusion paths, and results in a reduction in the soil's respiration rate over time. These limitations hinder the studying of CO_2 efflux changes in dynamic terrestrial ecosystems.

What is therefore needed is a better system which provides for the accurate, continuous measurement of soil and woody tissue respiration rates as they fluctuate diurnally and seasonally.

BRIEF SUMMARY OF THE INVENTION

In accordance with a first aspect of the invention, an apparatus for measuring the efflux of gas from a substrate

includes an inspection system having at least one air pump and a data analysis system. At least one measuring chamber has a substrate disposed therein that produces a quantity or a gas. A conduit system is attached to the measuring chamber at one end and to the inspection system at a second end. The at least one air pump supplies reference air having a known quantity of the gas to the at least one chamber via the conduit system so as to mix the reference air with the gas to produce a mixed air. The mixed air is then sent to the inspection system via the conduit system, and the data analysis system is able to measure the unknown quantity of gas.

These as well as other features and characteristics of the present invention will be apparent from the description which follows. In the detailed description below, preferred embodiments of the invention will be described with reference to the accompanying drawings. These embodiments do not represent the full scope of the invention. Rather the invention may be employed in other embodiments. Reference should therefore be made to the claims herein for interpreting the breadth of the invention.

BRIEF DESCRIPTION OF THE DRAWINGS

Reference is hereby made to the following figures in which like reference numerals correspond to the like parts throughout and in which:

FIG. **1** is an illustration of a gas efflux measuring assembly constructed in accordance with a preferred embodiment of the invention;

FIG. **2** is a top plan view of a measuring chamber of FIG. **1** taken along line **2**—**2**;

FIG. **3** is a sectional side elevation view of the measuring chamber of FIG. **2** taken along line **3**—**3**; and

FIG. **4** is a schematic illustration of the gas efflux measuring assembly in accordance with the preferred embodiment.

DETAILED DESCRIPTION OF THE INVENTION

Referring initially to FIG. **1**, a gas efflux measuring assembly **20** includes one or more measuring chambers **24** that are each independently connected to a central inspection system **22** via hosing **26** and **44**. Up to sixteen measuring chambers maybe supported by the inspection system **22** in accordance with the preferred embodiment, as will become apparent from the description below. Accordingly, while the preferred embodiment will be described as having sixteen measuring chambers **24**, it should be appreciated that the invention is not to be construed as being limited to this configuration.

Each measuring chamber **24** comprises a generally cylindrical body **27** having an upper surface **29** and an open bottom **30**. Disposed at the bottom of the cylindrical wall **27** is a metal lip or blade **32** that is configured to penetrate into the soil approximately 2 cm to form a quality seal with the soil surface to form an enclosed cavity defined by the soil, cylindrical wall **27**, and upper surface **29**. A pair of handles **31** is mounted onto wall **27** so that the chamber **24** is easily removable from the soil and transportable. At least one, and possibly two, vents **34** and **36** extend through the upper surface **29** and operate as pressure equilibration ports to promote an open flow through the chamber **24**, as will be described below.

Accordingly, when the measurement chamber **24** is inserted into the soil, CO_2 that is produced by the soil

disposed within the confines of the chamber will create a CO_2 enriched air therein. As will be described in more detail below, the inspection system **22** supplies a quantity of reference air, having a known CO_2 concentration, to the chamber **24**. The reference air becomes mixed with the CO_2 enriched air to produce a mixed gas, which is transported from the chamber **24** to the central inspection system **22** for analysis.

Referring now to FIGS. **2** and **3**, each measuring chamber **24** includes a lower and upper diffuser **28** and **42**, respectively, that are mounted onto the inner surface of wall **27**. The diffusers **28** and **42** are annular members that extend along the inner surface of wall **27**, having holes **38** and **40** interspersed throughout and spaced widely apart at locations proximal hose **26**. The holes **38** of the lower diffuser are more closely spaced as the distance from the hose **26** increases so that the reference air becomes evenly distributed throughout the diffuser **28**. This ensures that the mixed air is uniform to improve the results of the subsequent analysis without the need to install a mixing fan in the chamber **24**.

The lower diffuser **28** receives the reference air from the inspection system **22** via a supply tube **26**. As will be described in more detail below, the reference air has a known CO_2 content that is used, in part, to determine the CO_2 efflux of the substrate. The mixed air then travels upwards through the chamber **24** into the upper diffuser **42**, and is returned to the inspection system **22** via tubing **44** for analysis, as will be described in more detail below.

It should be appreciated that the fit between tubes **26** and **44** and the wall **27** is sealed to prevent the gas from escaping out the chamber **24**. Furthermore, the measuring chambers **24** and hosing are generally constructed of non-porous material and may be designed in any manner capable of providing accurate measurements. For example, the tubing may be either ¼ or ⅜ inch Bevaline IV® tubing (registered trademark of Thermoplastic Processes Inc.) and supplied by Cole Parker Instrument Co., Vernon Hills, Ill. in accordance with the preferred embodiment. It should be appreciated in this regard that other types of tubing could be used having sufficient CO_2 properties, and a suitable crush resistance.

The measuring chamber **24** further includes a pair of thermocouples **46** and **48** that are operable to output the temperature of the soil and the mixed air inside the chamber **24**, respectively. The thermocouples **46** and **48** are connected to a data logger **78** within the inspection system **22** via wires **50** and **51**. The temperature information provided by the thermocouples increases the accuracy of the soil respiration analysis, and may be used to inform a user whether a given chamber positioned in direct sunlight, is overheating. As a further measure to protect against overheating, the outer surface of the measuring chamber **24** may include reflective insulation that prevents "greenhouse" heating. The chamber **24** may further be equipped with a soil moisture reflectometer, such as the type commercially available from Campbell Scientific Inc. 815 West, 1800 North, Logan Utah, (not shown) which takes soil moisture readings and can be installed in a common location for continuous measurement.

Referring now to FIG. **4**, the inspection system **22** may be constructed from any suitably sized commercially available toolbox whose size is sufficient to accommodate the components, as will now be described. In particular, inspection system **22** includes an intake system including a filter **71**, flow meter **62**, and intake pump **58** that delivers mixed air from the chamber **24** to a gas analyzer via a solenoid valve **72**, as will be described in more detail below. The inspection system **22** further includes an outtake system including a flow meter **60** and an outtake pump **54** that is configured to deliver reference air to the chamber **24**, as will be described in more detail below. The pumps **54** and **58** used in accordance with the preferred embodiment are manufactured by Brailsford and Co. Inc, Rye, N.Y., such as the TD-4 NL(1), and operate under 12 volts of power (power supply not shown). The mass flow meters **60** and **62** used in accordance with the preferred embodiment are manufactured by Sierra Instruments Inc, Monterey Calif. and sold as the Top Track model 822.

The pumps are capable of producing flow rates of up to 3.0 liters per minute in accordance with the preferred embodiment. The flow generated by pumps **54** and **58** is controlled manually, for example, by potentiometers **68** and **69**, and is controlled such that the outtake flow rate is slightly greater than the intake flow rate. These flow rates maintain a slight positive pressure within the chamber **24**, as will be described in more detail below.

The inspection system **22** further includes a ballast tank **56** that is used in combination with the outtake system to provide a source of stable reference air, as the CO_2 concentration in ambient air can fluctuate widely, which would introduce noise into the respiration measurement. The ballast tank **56** is a relatively large plastic vessel having holes in its outer wall that are open to the ambient environment. The tank **56** also has a sufficient volume such that the ambient air becomes mixed therein to minimize the variability of CO_2 concentrations that may exist in the ambient environment. In accordance with the preferred embodiment, the tank **56** is formed from the Action Packer cargo box manufactured by Rubbermaid, Inc, Wooster, Ohio, and has a volume of approximately 132 liters. In extreme circumstances, where the CO_2 concentration is fluctuating too rapidly to be overcome using the ballast tank **56**, an air compressor (not shown) could be used instead of the ballast tank **56** to homogenize the CO_2 concentration. In accordance with the preferred embodiment, the reference air flows from the ballast tank **56**, through a filter **70**, and to the outtake pump **54**.

The inspection system **22** further includes a gas analysis system **63** including the gas analyzer **76**, data logger **78**, and a data output terminal **66**. The gas analyzer **76** is operable to determine the CO_2 concentration of the mixed gas, and to output the results to the data logger **78**, which additionally receives temperature and flow data from thermocouples **46** and **48** and flow meters **58** and **60**, respectively. The data logger **78** then calculates the gas efflux, as well as the temperatures from thermocouples **46** and **48**. The data output terminal **66** receives data from the data logger **78**, and displays data to the user regarding the gas efflux of the substrate over a given period of time, the temperature of the soil and air within a given chamber, as well as any additional desirable parameters. It should be easily appreciated that the preferred embodiment could be configured to measure the respiration of any suitable substrate that is disposed within a chamber.

Operation of the assembly will now be described with reference to the measuring of carbon efflux of a substrate, such as soil, disposed in one of the chambers **24**, though it should be appreciated that the present invention is capable of systematically analyzing substrates in a plurality of chambers, as will be described in more detail below. The reference air travels from the ballast tank **56**, through a filter **70**, and to a solenoid valve **72**. The solenoid valve **72** used in accordance with the preferred embodiment is the type

manufactured by Versa Products Co. Inc., 22 Spring Valley Road, Paramus, N.J. The valve **72** is controlled by data logger **78**, and couples the reference air to the gas analyzer **76**. As will be described in more detail below, the valve **72** also receives the mixed air as input, and iteratively allows the mixed air and reference air to be analyzed by the gas analyzer **76**, as will be described in more detail below.

As described above, the reference air additionally flows from the ballast tank **56** to an outtake pump **54**, and from the pump to the lower diffuser **28** via the mass flow meter **60**. Analog output of the outtake flow is sent from the mass flow meter **60** to the datalogger **78** for use during the carbon efflux analysis, as will be described in more detail below. Once the reference air becomes mixed with the CO_2 enriched air in the chamber **24** to form the mixed air that is to be analyzed, the mixed air flows upwardly in the measuring chamber **24** towards the upper diffuser **42**. Most of the mixed air enters the holes **40** in upper diffuser **42** under pressure supplied by the intake pump **58** via hosing **44**. In particular, the intake pump **58** supplies suction within the chamber **24** which causes the mixed air to flow upwards and into the upper diffuser **42**.

The remaining mixed air that does not enter the diffuser **42** exits the chamber **24** via the equilibration ports **34** and **36** to produce an open flow-through design. Accordingly, the equilibration ports **34** and **36** ensure that the air pressure within the measuring chamber **24** is near ambient and that any leaks are pushing outwards to prevent ambient air having an unknown CO_2 concentration from entering the chamber **24**. The flow of the outtake pump **54** is therefore adjusted so as to provide a greater flow rate than that of the intake pump **58** so as to ensure that the mixed air rises within the chamber **24**. As a result, in order to maintain accurate gas and data measurements, the overall air flow entering the measuring chamber is greater than the overall air flow exiting the chamber, thus providing a slightly positive chamber pressure of preferably no greater than 0.5 Pa, as pressures greater than this amount have been empirically found to adversely affect the reliability of the soil respiration analysis.

In addition, the constant airflow through the chamber **24** ensures that the air will remain at equilibrium, avoiding the accumulation of CO_2 enriched air during non-sampling periods. This will facilitate more rapid measurements when as the system will not have to wait for the air inside a given chamber **24** to reach equilibrium when the air inside that chamber is to be analyzed. Furthermore, it has been determined that excess CO_2 inhibits soil respiration and, accordingly, the equilibration ports **34** and **36** and open flow-through design facilitate soil respiration to improve the accuracy of the measurements. Additionally, it has been observed that the humid air emitted by the soil can produce condensation that could obstruct air from entering the return tube **44**. The constant influx of reference air removes the more humid air, and additionally removes excess moisture from the tubing. It is therefore advantageous to supply reference air to the chamber **24** even when that chamber is not being analyzed, as will be described in more detail below. Equilibration port **36** may further be connected to a digital manometer (not shown) to verify pressure differential between the chamber and the outside environment.

The mixed air flows from tubing **44** into a filter **71**, through a flow meter **42** and intake pump **58**, and into the valve **72**. To measure the carbon efflux of the substrate in one of the chambers **24**, the CO_2 concentration in the reference air as well as the CO_2 concentration in the mixed air is measured by the single cell gas analyzer **76**, such as the type commercially available from PP Systems, located at Unit 2, Glovers Court, Bury Mead Road, Hitchin, Herts, SG5 1RT UK. It should be appreciated, however, that the gas analyzer **76** may alternatively comprise any suitable gas analyzer. For example, a differential gas analyzer could be used that would directly accept the two inputs, thereby foregoing with the implementation of the two-way solenoid pinch valve **72**. In accordance with the preferred embodiment, the valve **72** iterates under the control of data logger **78** from a first position that allows reference air to flow into the gas analyzer **76** while shunting away the gas enriched air, to a second position that allows the gas enriched air to be analyzed while shunting away the reference air.

The gas analyzer **76** then determines the gas concentration of the air being analyzed, and communicates the results to the data logger **78**, which comprises Model Number CR 23 X commercially available from Campbell Scientific.

The data logger **78** calculates the gas efflux by first determining the molar flow rate of air passing through the measuring chamber (AFlow). Next, the flux rate of the gas (Flux) is determined based on the difference in CO_2 values between the reference air and the mixed air. Finally, the gas efflux value is that flux expressed over the area of the substrate measured.

The flow rate of the air passing through the chamber **24** is expressed by the equation:

$$AFlow(\text{moll min}) = \frac{Flow(\text{lpm})}{22.4} * \frac{273.15}{273.15 + air\ temp} + \frac{BP(\text{kPa})}{101.3} \quad (1)$$

The flow is divided by 22.4 as 22.4 is the volume of 1 mole of air (dm3) at S.T.P. The air temp is the temperature (Celsius) of the air in chamber **24**. BP(kPa) is the barometric pressure in kilopascals.

The flux rate of the gas is then determined by the equation:

$$Flux(\mu\text{mol}/s) = \frac{(\Delta CO_2 * AFlow)}{60} \quad (2)$$

In equation 2, ΔCO_2 is the difference in CO_2 concentration between the reference air and the mixed air, as determined by the gas analyzer **76** and data logger **78**.

The carbon efflux, or soil respiration, is the flux expressed over the area of substrate measured, as determined by the equation:

$$\text{Respiration}\left(\frac{\mu\text{mol}}{s^{-1}m^{-2}}\right) = \frac{Flux}{\text{surface area}} \quad (3)$$

As described above, the inspection system **22** is capable of determining the carbon efflux of substrates disposed in a plurality of chambers, and up to 16 chambers in accordance with the preferred embodiment. In accordance with this embodiment, the invention employs a multiport system **73** supporting the series of measuring chambers whose gas efflux is measured sequentially (fixed or variable time step) using the gas analyzer **76**. In particular, the outtake pump **54** of the inspection system **22** is connected to a first manifold **75** having a number of two-way solenoid valves **81** disposed therein that are, in turn, connected to the mixed flow hosing **44** of a corresponding number of chambers chamber **24**. The valves are operated by a control **74** such that only one of the valve is open at a time, thereby ensuring that the mixed flow

from only one chamber is measured by the gas analyzer **76** at any given time. As described above, the valve **72** connected to the gas analyzer **76** iterates between a first position, allowing the reference air to be sampled, and a second position whereby the mixed air is output to the gas analyzer **76**.

The outtake pump **54** of the inspection system **22** sends the reference air through a second manifold **77** having a conduit system corresponding to each chamber such that a constant supply of reference air is supplied to each chamber via hosing **26**. Accordingly, during non-sampling periods, each measuring chambers **24** is continuously flushed with reference air to prevent gas efflux accumulation within the chamber, as described above. As during sampling periods, the reference air is continuously supplied to the measuring chamber **24** along the first air hose **26** and allowed to mix with the gas efflux to form the gas enriched air. When that chamber **24** is not being sampled, the mixed air, instead of being pulled into the inspection system **22** via hosing **44**, exits through the equilibration ports **34** and **36**. This one-way pumping of reference air is usually performed at 1.50 liters per minute, per chamber, resulting in a positive pressure of preferably no greater than 0.5 Pa within the chamber, as discussed above.

Additionally, when a plurality of measuring chambers **24** are connected to the inspection system **22**, the corresponding thermocouples **46** and **48** for each chamber output to a multiplexer **79**, which operates under commands from control **74**. The multiplexer **79** outputs data to the data logger **78**, which provides measurements of the soil and air temperature in each chamber **24**.

This embodiment may also take advantage of a null chamber (not shown) to assist in the determination of carbon efflux. In particular, the null chamber is similar to the measuring chamber **24**, except the bottom **30** which is normally in contact with the soil is sealed to form an enclosed cavity, having ventilation ports **34** and **36**. Reference air is supplied and sampled as described above. The sampling of the null chamber will produce a slightly positive or slightly negative carbon efflux value, which accounts for minor variations of the reference air and any absorption or desorption of CO2 by system components. Accordingly, the efflux value obtained from the null chamber may be added to the value obtained for each measuring chamber **24** to provide a more accurate calculation of the carbon efflux.

The invention has been described in connection with what are presently considered to be the most practical and preferred embodiments. However, the present invention has been presented by way of illustration and is not intended to be limited to the disclosed embodiments. Accordingly, those skilled in the art will realize that the invention is intended to encompass all modifications and alternative arrangements included within the spirit and scope of the invention, as set forth by the appended claims.

We claim:

1. An apparatus for measuring gas efflux from a substrate comprising:

an inspection system having at least one air pump and a data analysis system;

at least one measuring chamber having a substrate disposed therein said substrate producing an unknown quantity of gas;

a conduit system attached to said at least one measuring chamber at one end and to the data analysis system of said inspection system at a second end, wherein said at least one air pump supplies reference air from a ballast tank through said conduit system to the at least one measuring chamber and mixed air is returned to the data analysis system of said inspection system through said conduit system; and

wherein the at least one air pump supplies reference air having a known quantity of the gas to the at least one measuring chamber via the conduit system so as to mix the reference air with the gas to produce a mixed air, and wherein the mixed air is sent to the inspection system via the conduit system, and wherein the data analysis system is configured to measure the unknown quantity of gas, and wherein a positive measuring chamber pressure of no greater than 0.5 Pa is maintained.

2. The apparatus as recited in claim **1**, wherein the conduit system further comprises a supply tube and a return tube, wherein the supply tube supplies the reference air to the at least one measuring chamber, and wherein the return tube receives the mixed air from the at least one measuring chamber.

3. The apparatus as recited in claim **2**, wherein the at least one measuring chamber includes a first diffuser having a plurality of apertures, wherein the at least one measuring chamber is in fluid communication with the supply tube through said first diffuser which is attached to said supply tube and reference air is supplied to the at least one measuring chamber through said first diffuser.

4. The apparatus as recited in claim **3**, wherein the at least one mixing chamber includes a second diffuser having a plurality of apertures, wherein the at least one measuring chamber is in fluid communication with the return tube through said second diffuser which is attached to said return tube and mixed air from the at least one measuring chamber enters the return tube through the apertures of said second diffuser.

5. The apparatus as recited in claim **4**, wherein the first and second diffusers comprise annular bodies.

6. The apparatus as recited in claim **1**, wherein the at least one measuring chamber further includes an equilibration port configured to release air that is disposed within the at least one measuring chamber into the environment.

7. The apparatus as recited in claim **6**, wherein air is supplied to the at least one measuring chamber at a greater flow rate than the rate at which the mixed air is sent to the inspection system.

8. The apparatus as recited in claim **6**, wherein the at least one measuring chamber further comprises a second equilibration port configured to release air disposed within the at least one measuring chamber into the environment, wherein said second equilibration port is equipped with a pressure measuring device so as to determine the pressure of air released from the second equilibration port.

9. The apparatus as recited in claim **1**, wherein the data analysis system comprises at least one flow meter, a gas analyzer, and a data output system, wherein the at least one flow meter measures the rate at which the reference air is supplied to the at least one measuring chamber and the rate at which the mixed air is sent from the at least one measuring chamber to the inspection system, and wherein the gas analyzer determines the gas concentration in the reference air and the mixed air, and wherein the data output system determines the unknown quantity of gas.

10. The apparatus as recited in claim **1**, wherein the at least one measuring chamber further comprises a first thermocouple to measure the temperature of the substrate, and a second thermocouple to measure the temperature of the chamber.

11. The apparatus as recited in claim **1**, further comprising a plurality or measuring chambers that are coupled to the

inspection system, and wherein the inspection system iterates between said plurality of measuring chambers so as to measure unknown quantities of gas that are emitted by a plurality of substrates.

12. A method of measuring gas efflux from a substrate, comprising the steps of:

(a) placing at least one measuring chamber in fluid communication with a inspection system;

(b) accumulating a quantity of a gas from the substrate within the at least one measuring chamber over a predetermined amount of time;

(c) sending reference air from the ballast tank to the inspection system into the at least one measuring chamber, wherein the reference air has a known quantity of the gas;

(d) mixing the reference air with the gas from the substrate within the at least one measuring chamber to produce a mixed air;

(e) sending the mixed air to the inspection system; and

(f) measuring the quantity of the accumulated gas from the substrate inside the inspection system over the amount of time.

13. The method as recited in claim **12**, further comprising between steps (e) and (f), measuring the quantity of the gas from the mixed air and subtracting the known quantity of gas from the reference air over the amount of time.

14. The method as recited in claim **13**, further comprising sending the reference air at a greater rate than the mixed air.

15. The method as recited in claim **14**, further comprising releasing a portion of the mixed air out the at least one measuring chamber through an equilibration port.

16. The method as recited in claim **15**, further comprising releasing the portion of the mixed air through the equilibration port at a rate that is less than the difference between the rate of sending the reference air and sending the mixed air so as to maintain an air pressure within the at least one measuring chamber of no greater than 0.5 Pa.

17. The method as recited in claim **12**, wherein step (a) further comprises placing a plurality of measuring chambers in fluid communication with the inspection system, and repeating steps (b) through (f) for each chamber.

18. A method for measuring the efflux of a gas from a substrate comprising the steps of:

sealing at least one measuring chamber having an equilibration port, a first diffuser and a second diffuser, against an area of substrate having a gas efflux to be measured;

with a first pump, pumping into the at least one measuring chamber through the first diffuser of each measuring chamber a continuous supply of a reference air from a ballast tank such that the reference air diffuses with the gas efflux to form a gas enriched air and with a second pump, pumping from the at least one measuring chamber through the second diffuser of each measuring chamber a continuous supply of the gas enriched air such that the amount of reference air entering the at least one measuring chamber is greater than the amount of gas enriched air exiting the at least one measuring chamber and a positive measuring chamber pressure of no greater than 0.5 Pa is maintained;

continuously analyzing the gas enriched air withdrawn from the at least one measuring chamber over a period of time to collect a plurality of gas concentration measurements from the gas enriched air and to collect a molar flow rate measurement of the gas enriched air passing through the measuring chamber; and

determining the gas efflux of the substrate according to the gas concentration measurements and the molar flow rate measurement.

* * * * *